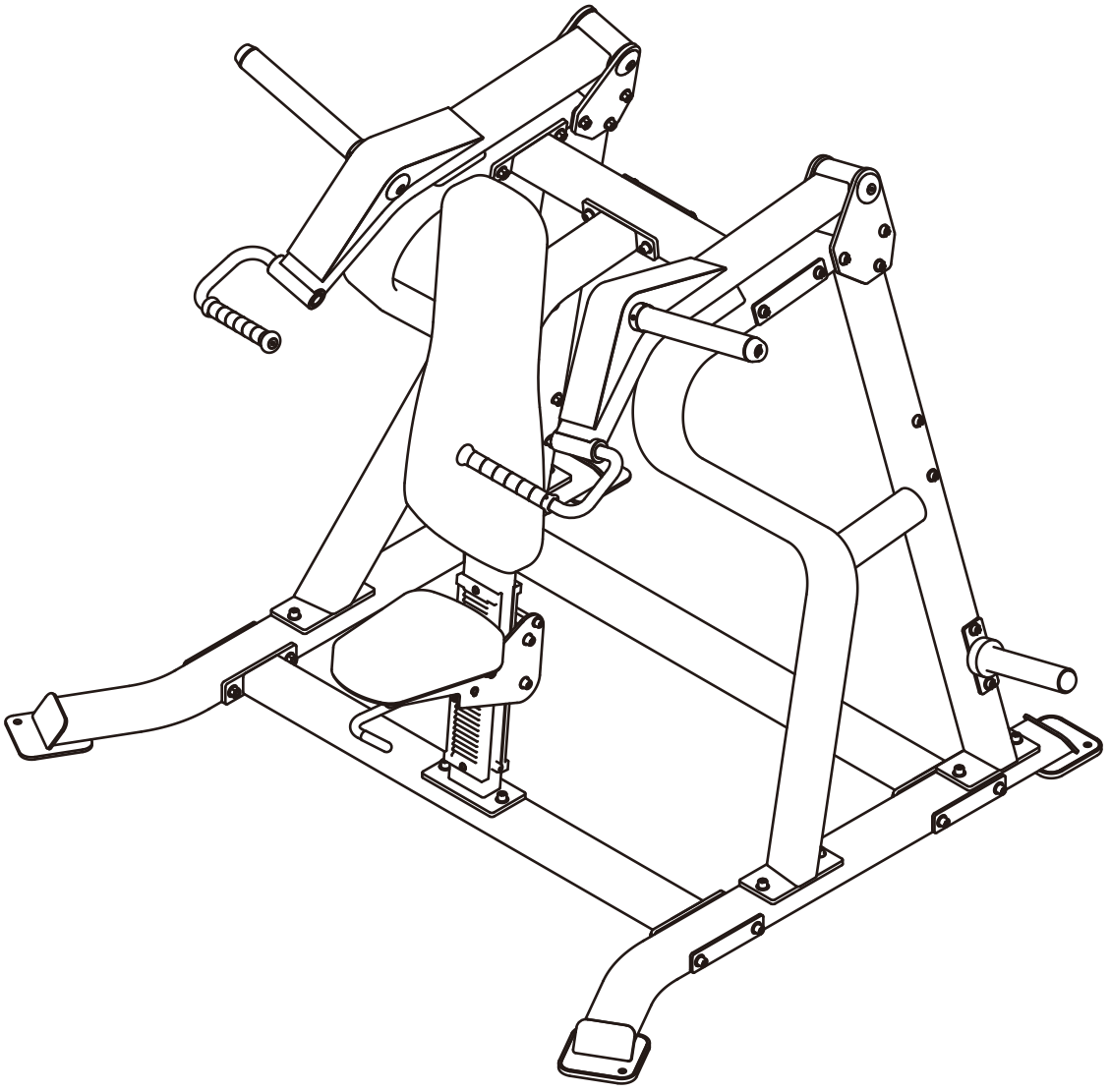

SL7003

Shoulder Press

Owner's Manual

20Q

CAUTION! Read all precautions and instructions in this manual before using this equipment.

Table Of Contents

CAUTION!

Read all precautions and instructions in this manual before using this equipment.

Important Safety Instructions---------- 3

Instructions---------- 5

Parts List---------- 6

Exploded View---------- 7

Measurement Guide---------- 8

Assembly Instructions---------- 9

Assembly---------- 10

Adjust Instructions----------15

Exercise Instructions----------16

Maintenance Schedule---------- 17

General Maintenance Information---------- 18

Weight Training Tips---------- 19

Important Safety Instructions

Before beginning any fitness program, you should obtain a complete physical examination from your physician. When using exercise equipment, basic precautions should always be taken, including the following:

1. Read all instructions before using the equipment.
   These instructions are written to ensure your safety and to protect the unit.

2. Use the equipment only for its intended purpose as described in this guide.
   Do not use accessory attachments that are not recommended by the manufacturer: such attachments might cause injuries.

3. The product should only be used on a level surface and is with 0.6 meters space around the product.
   Do not use the equipment outdoors.

4. Do not allow children on or near the equipment. And children are not allowed to use this equipment.
   Teenagers should use this equipment with adult supervision.

5. Do not overexert yourself or work to exhaustion.
   Do not attempt to lift more weight than you can control safely.
   If you feel any pain or abnormal symptoms, stop your workout immediately and consult your physician.

6. This equipment is not used as medical apparatus and instruments.

7. Never operate the unit when it has been dropped or damaged.
   Never drop or insert anything into any opening in the equipment.
   Always check the unit and its cables before each use. Make sure that all fasteners and cables are secure and in good working condition.
   Frayed or worn cables can be dangerous and may cause injury. Periodically check these cables for any indication of wear.
   Keep hands, limbs, loose clothing and long hair well out of the way of moving parts.

8. Be careful when getting on or off the equipment.

9. Wear proper exercise clothing and shoes for your workout, no loose clothing.

Important Safety Instructions

Personal Safety During Assembly

Read each step in the assembly instructions and follow the steps in sequence. Do not skip ahead. If you skip ahead, you may learn later that you have to disassemble components and that you may have damaged the equipment.

Assemble and operate the equipment on a solid, level surface. Locate the unit a few feet from walls or furniture to provide easy access. The equipment is designed for your enjoyment. By following these precautions and using common sense, you will have many safe and pleasurable hours of healthful exercise with the equipment.

Training Area and Free Area

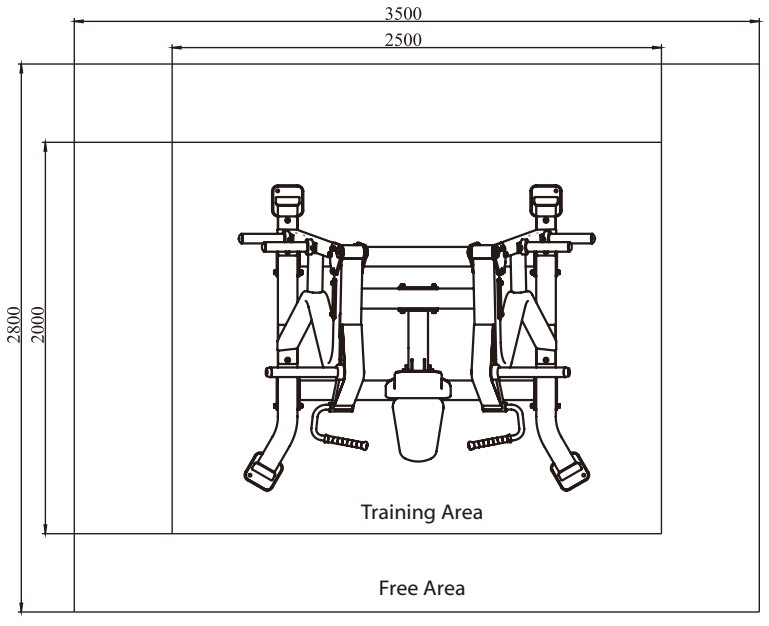

Specifications

Class: S

Maximum Wt. Capacity: 2*150kg/ 330lbs

Maximum User Weight: 150kg/ 330lbs

Product Dimension: 1754*1545*1482mm

Product Total Surface: 2500*2000mm

Product Total Mass:171.5kg/ 378lbs

Instructions

Before beginning assembly please take the time to read instructions thoroughly. Please use the various lists in this manual to make sure that all parts have been included in your shipment. When ordering, use part number and description from the lists. Use only our replacement part when servicing. Failure to do so will void your warranty and could result in personal injury.

The equipment is designed to provide the smoothest, most effective exercise motion possible. After assembly, you should check all functions to ensure correct operation. If you experience problems, first recheck the assembly instructions to locate any possible errors made during assembly. If you are unable to correct the problem, call your authorized dealer. Be sure to have your serial number and this manual when calling. When all parts have been accounted for, continue on.

Tools Required

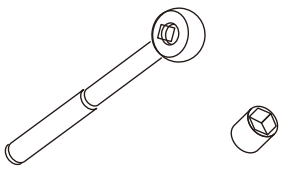

Ratchet Wrench and Socket

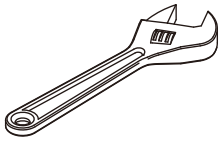

Adjustable Wrench

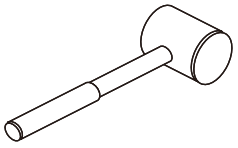

Rubber Mallet

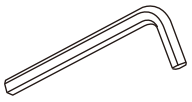

Hex Key Wrench Set

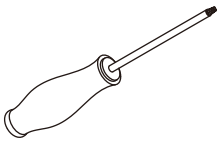

Phillips Screwdriver

Parts List

NOTE: SOME OF THESE PARTS MAY COME PRE-INSTALLED.

Item No.	Description	Qty	Item No.	Description	Qty
1	left Upright Frame	1	37	Seat Pad	1
2	Up Cross Frame	1	38	Large Rubber Bumper	2
3	Right Upright Frame	1	39	Aluminium Cap Φ25	2
4	Back Standing Frame	1	40	Aluminium Ring Φ25	2
5	Adjustable Handle	1	41	End Plug	4
6	Right Arm Frame	1	42	Rubber Grip	1
7	Seat Frame	1	43	Rubber Foot	4
8	Left Arm Frame	1	44	Socket Set Screw M8*6	4
9	Front Cross Frame	1	45	Ball Bearing 6206-2Z	4
10	Left Bottom Frame	1	46	External Retaining Ring Φ12	2
11	Wheel Shaft	3	47	Socket Head Cap Screw M12*155	6
12	Right Bottom Frame	1	48	Socket Head Cap Screw M12*145	3
13	Rear Cross Frame	1	49	Socket Head Cap Screw M12*135	14
14	Weight Horn Assembly	2	50	Socket Head Cap Screw M12*125	8
15	Weight Plate Storage	4	51	Socket Head Cap Screw M12*90	4
16	Pivot Shaft Φ30	2	52	Socket Head Cap Screw M12*35	12
17	Pivot Plate 1	2	53	Flat Head Cap Screw M12*30	4
18	Pivot Plate 2	2	54	Flat Head Cap Screw M12*50	2
19	Front Plastic Plate	1	55	Flat Head Cap Screw M10*25	2
20	Rear Plastic Plate	1	56	Socket Head Cap Screw M10*145	1
21	Rubber Bumper	2	57	Button Head Cap Screw M10*75	1
22	Weight Horn Rubber Donut	4	58	Button Head Cap Screw M10*30	3
23	Domed Aluminium Cap	6	59	Button Head Cap Screw M8*70	2
24	Long Weight Horn Sleeve	2	60	Socket Set Screw 10-32*3.2	4
25	Weight Horn Sleeve	4	61	Nylon lock Nut M12	35
26	Weight Horn Plastic Cap	2	62	Nylon lock Nut M10	1
27	Aluminium Grip	2	63	Nylon lock Nut M8	2
28	Pull Spring	1	64	Flat Washer Φ11*Φ20*2	6
29	Idler Wheel	3	65	Flat Washer Φ13*Φ24*1.5	84
30	Wring Spring	1	68	Hex key S=10	1
31	Shaft For Adjustable Handle	1	69	Hex key S=8	1
32	Oilite Bushing	2	70	Hex key S=6	1
33	Ball Bearing	6	71	Hex key S=4	1
34	External Retaining Ring Φ17	6	72	Supporting Sleeve	1
35	Back Pad	1	73	Baffle Ring	4
36	Plastic Sleeve	2			

Exploded View

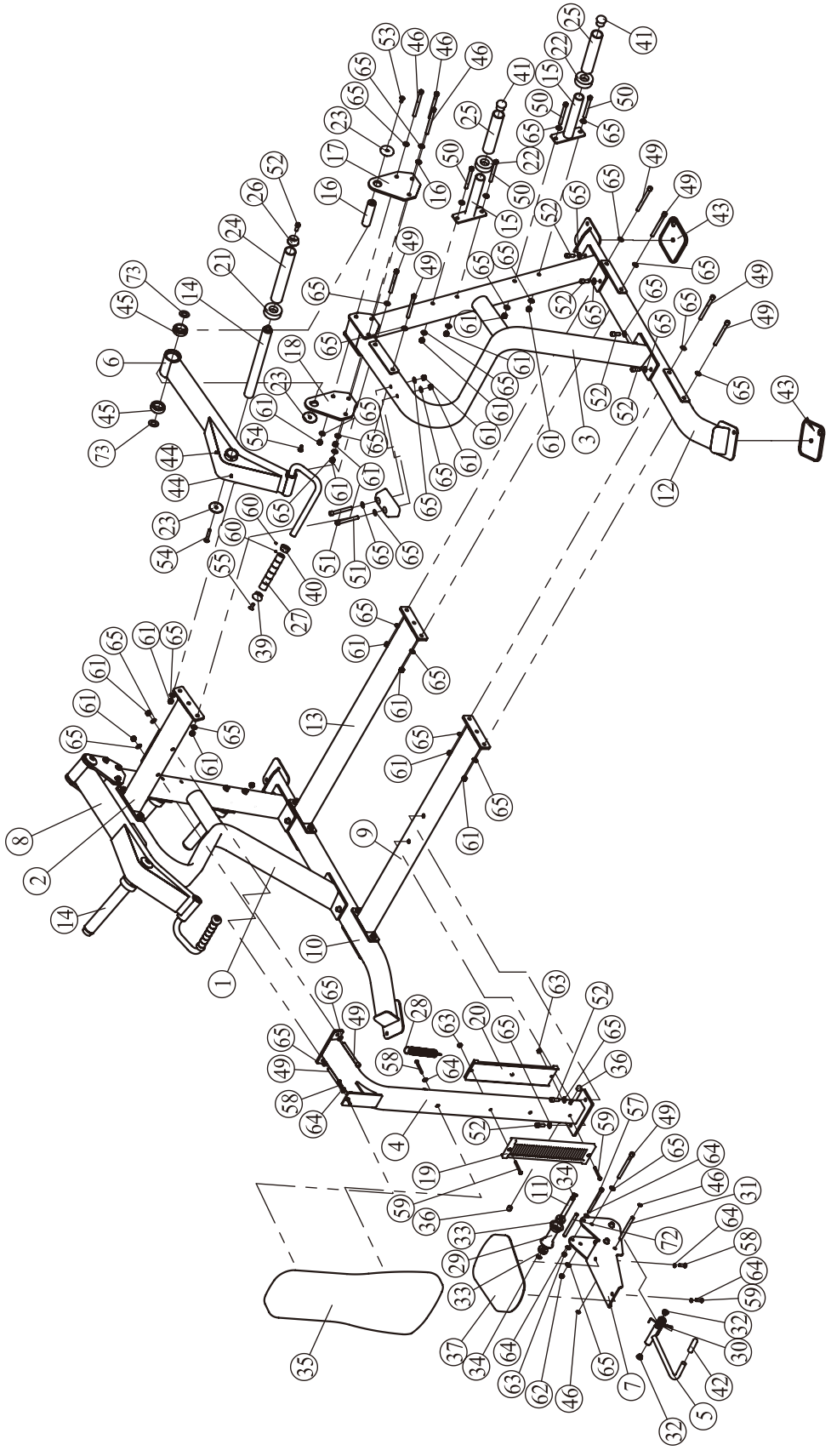

Measurement Guide

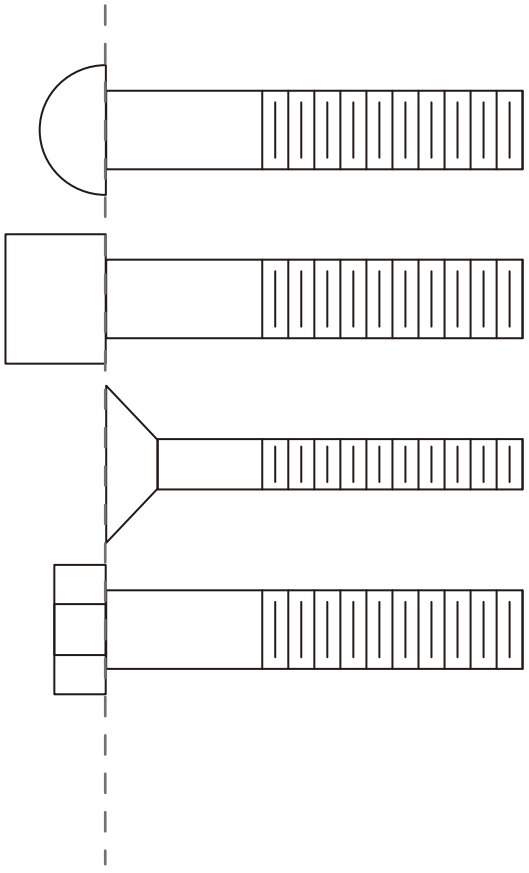

BHCS = Button Head Cap Screw

SHCS = Socket Head Cap Screw

FHCS = Flat Head Cap Screw

HHB = Hex Head Bolt

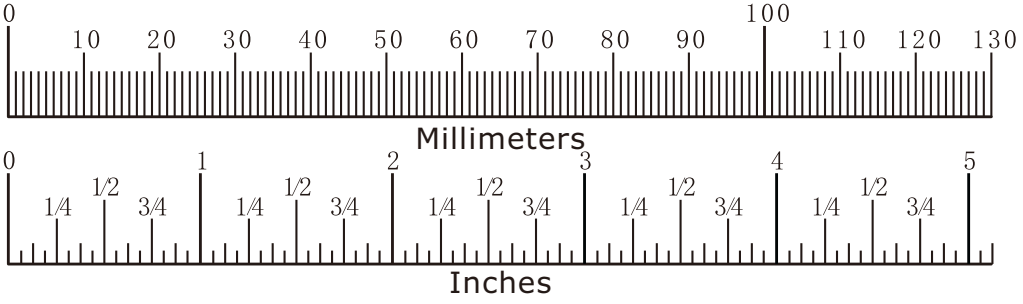

Diameter of bolt (mm/inch)	M6(1/4")	M8(5/16")	M10(3/8")	M12(1/2")	M16(5/8")
Tightening torque (N.m)	9~12	22~30	45~59	78~104	193~257
Operational methods for adult men	The strength of the wrist	The strength of the wrist and forearm	The strength of the entire arm	The strength of the arm and upper body	with all strength

Assembly Instructions

Assembly of the equipment takes professional installers about 2 hours. If this is the first time you have assembled this type of equipment, plan to spend more time. It is strongly recommended to assemble the equipment by professional installers. You may find it quicker, safer, easier to assemble this equipment with the help of a friend, as some of components may be large, heavy or awkward to handle alone. It is important that you assemble your product in a clean, clear, uncluttered area. This will enable you to move around the product while you are fitting components and reduce the possibility of injury during assembly.

⚠ NOTE

As with any assembled part, proper alignment and adjustment is critical. While tightening the fasteners, be sure to leave room for adjustments. Do not fully tighten the fasteners until instructed to do so. Be careful to assemble the components in the sequence presented in this guide.

Assembly

Step 1

1. Attach the Left Bottom Frame (#10) to the Front Cross Frame (#9) and Rear Cross Frame (#13), using:
   eight Φ13*Φ24*1.5 Flat Washers (#65) four M12*135 SHCS (#49)
   four M12 Nylon lock Nuts (#61)
2. Attach the Right Bottom Frame (#12) to the Front Cross Frame (#9) and Rear Cross Frame (#13), using:
   eight Φ13*Φ24*1.5 Flat Washers (#65) four M12*135 SHCS (#49)
   four M12 Nylon lock Nuts (#61)

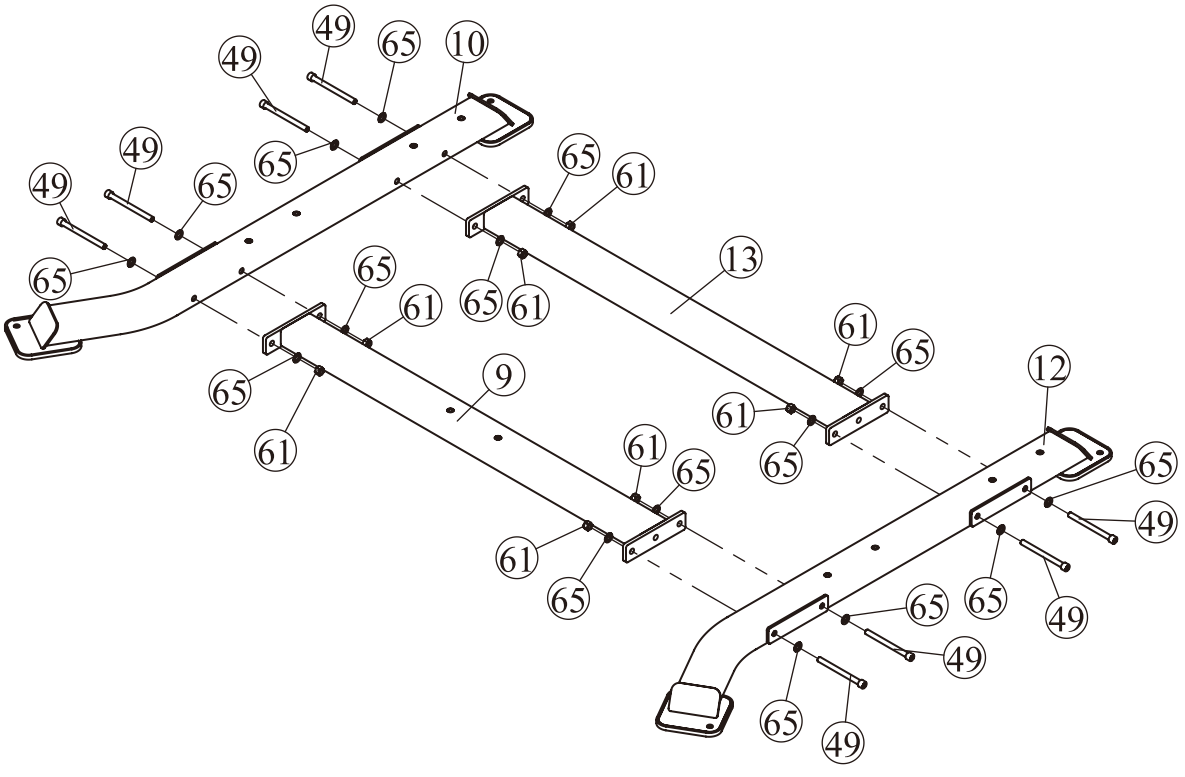

Assembly

Step 2

1. Attach the left Upright Frame (#1) to the Left Bottom Frame (#10), using:
   four Φ13*Φ24*1.5 Flat Washers (#65) four M12*35 SHCS (#52)
2. Attach the Right Upright Frame (#3) to the Right Bottom Frame (#12), using:
   four Φ13*Φ24*1.5 Flat Washers (#65) four M12*35 SHCS (#52)
3. Attach the Up Cross Frame (#2) to the left Upright Frame (#1) and the Right Upright Frame (#3), using:
   eight Φ13*Φ24*1.5 Flat Washers (#65) four M12*135 SHCS (#49)
   four M12 Nylon lock Nuts (#61)
4. Attach the Back Standing Frame (#4) to the Up Cross Frame (#2) and the Front Cross Frame (#9), using:
   six Φ13*Φ24*1.5 Flat Washers (#65) two M12*135 SHCS (#49)
   two M12 Nylon lock Nuts (#61) two M12*35 SHCS (#52)

NOTE: Tighten all the hardware.

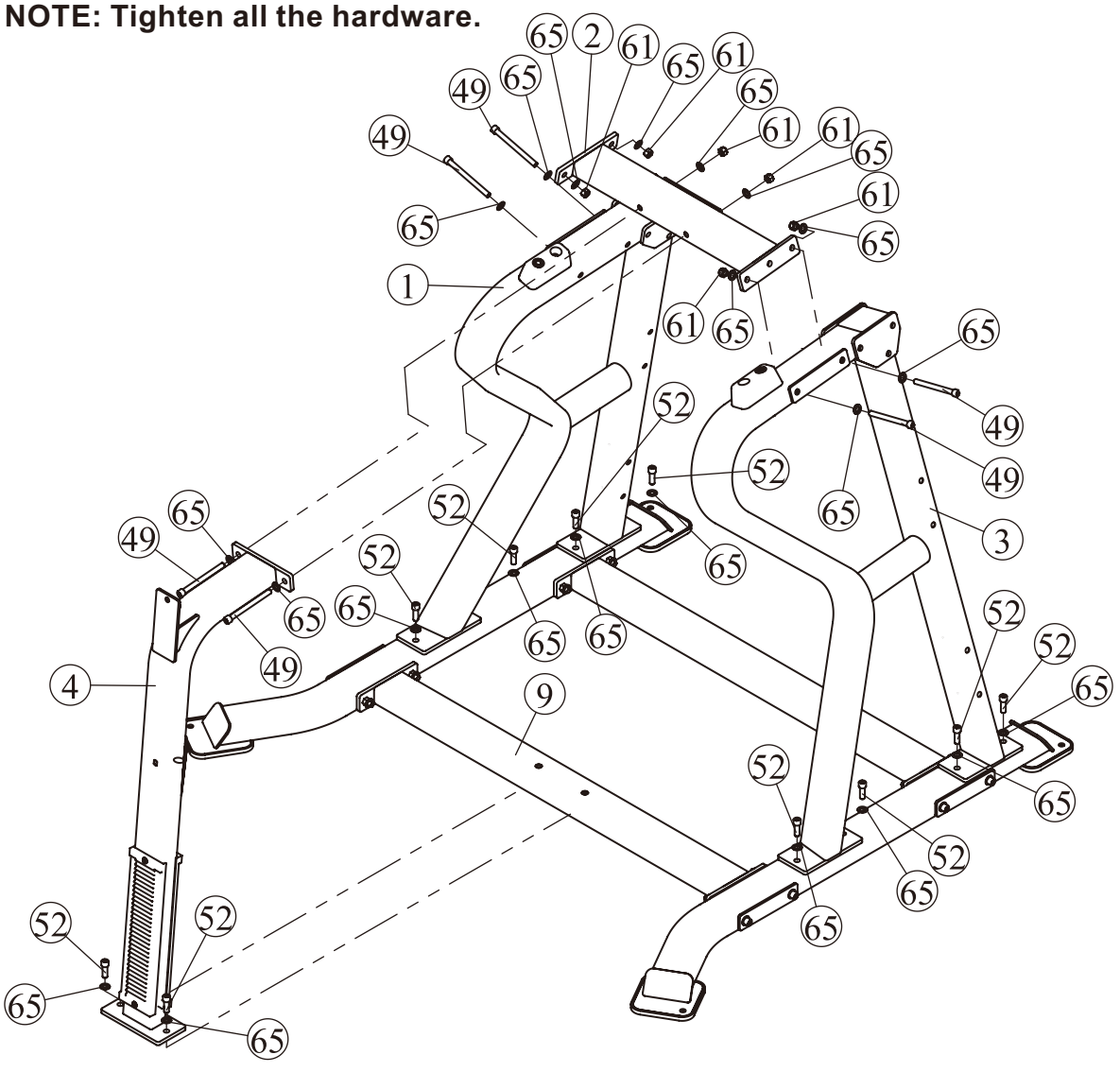

Assembly

Step 3

1. Attach two Pivot Plate 1 (#17), two Pivot Plate 2 (#18) to Right Upright Frame (#3) and Left Upright Frame (#1), using:
   six M12*155 SHCS (#47) six M12 Nylon lock Nut (#61)
   twelve Φ13*Φ24*1.5 Flat washer (#65)

NOTE: DO NOT tighter the hardware.

2. Attach Left Arm Frame (#8) to Pivot Plate 1 (#17) and Pivot Plate 2 (#18), using:
   one Pivot Shaft Φ30 (#16) two Baffle Ring (#73)
   two Domed Aluminum Cap (#23) two M12*30 FHCS (#53)
3. Attach Right Arm Frame (#6) to Pivot Plate 1 (#17) and Pivot Plate 2 (#18), using:
   one Pivot Shaft Φ30 (#16) two Baffle Ring (#73)
   two Domed Aluminum Cap (#23) two M12*30 FHCS (#53)

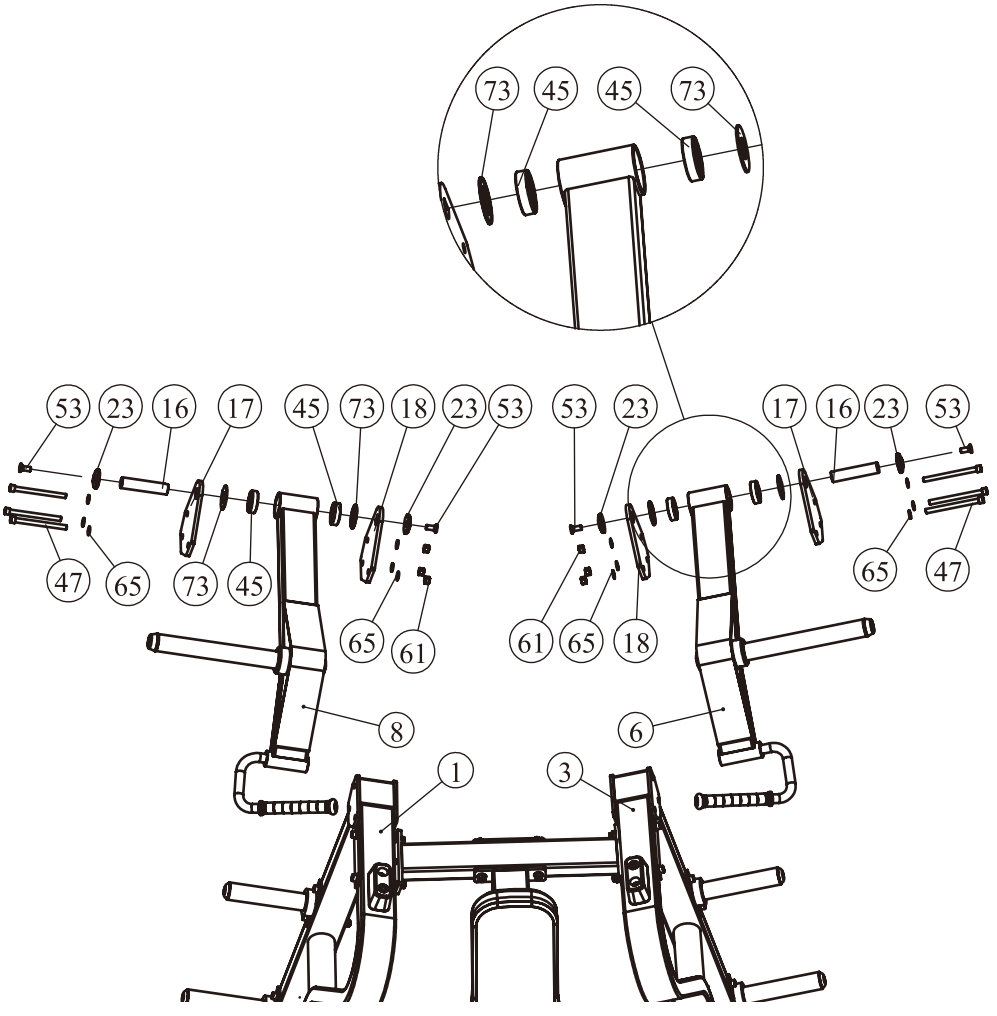

Assembly

Step 4

1. First attach Supporting Sleeve Φ16*2*117 using:
   one M10*145 Socket Head Cap Screw
   two Φ11*Φ20*2 Flat Washer
   one M10 Nylon lock Nut
2. Then attach Pull Spring to Supporting Sleeve.

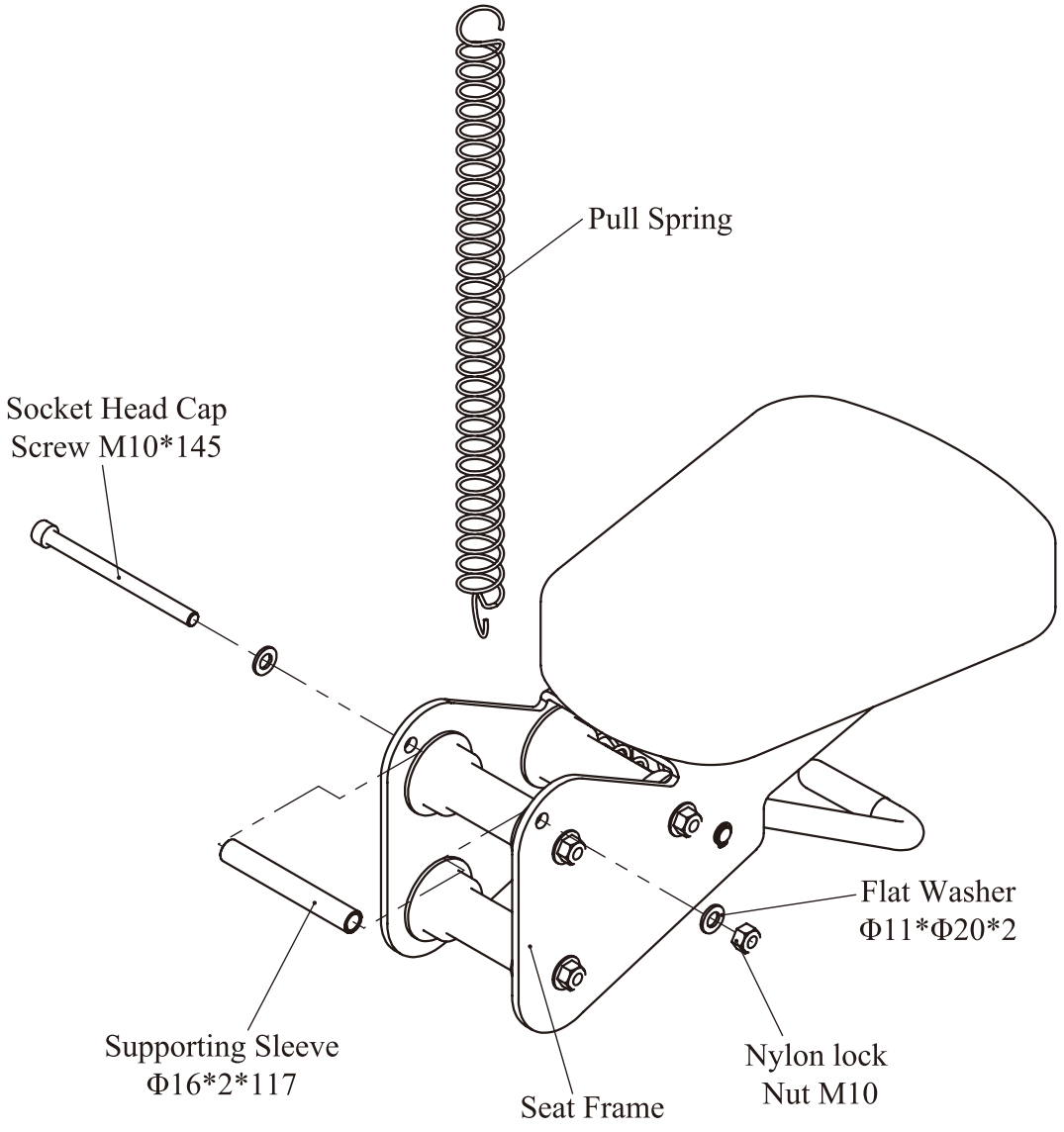

Assembly

Step 5

1. Attach the Seat Pad (#29) to the Seat Frame (#7), using:
   two Φ11*Φ20*2 Flat Washer (#64) two M10*30 BHCS (#58)
2. Attach the Seat Frame (#7) to the Back Standing Frame (#4), using:
   two Idler Wheel Assemblys (#29) two M12*145 SHCS (#48)
   four Φ13*Φ24*1.5 Flat Washers (#65) two M12 Nylon lock Nuts (#61)
3. Attach the Back Pad (#35) to the Back Standing Frame (#4), using:
   two Φ11*Φ20*2 Flat Washer (#64) one M10*30 BHCS (#58)
   one M10*75 BHCS (#57)
4. Attach the Pull Spring (#28) to the Back Standing Frame (#4), using:
   two Φ11*Φ20*2 Flat Washers (#64) one M10*145 SHCS (#56)
   one M10 Nylon lock Nut (#62)

NOTE: Tighten all the hardware.

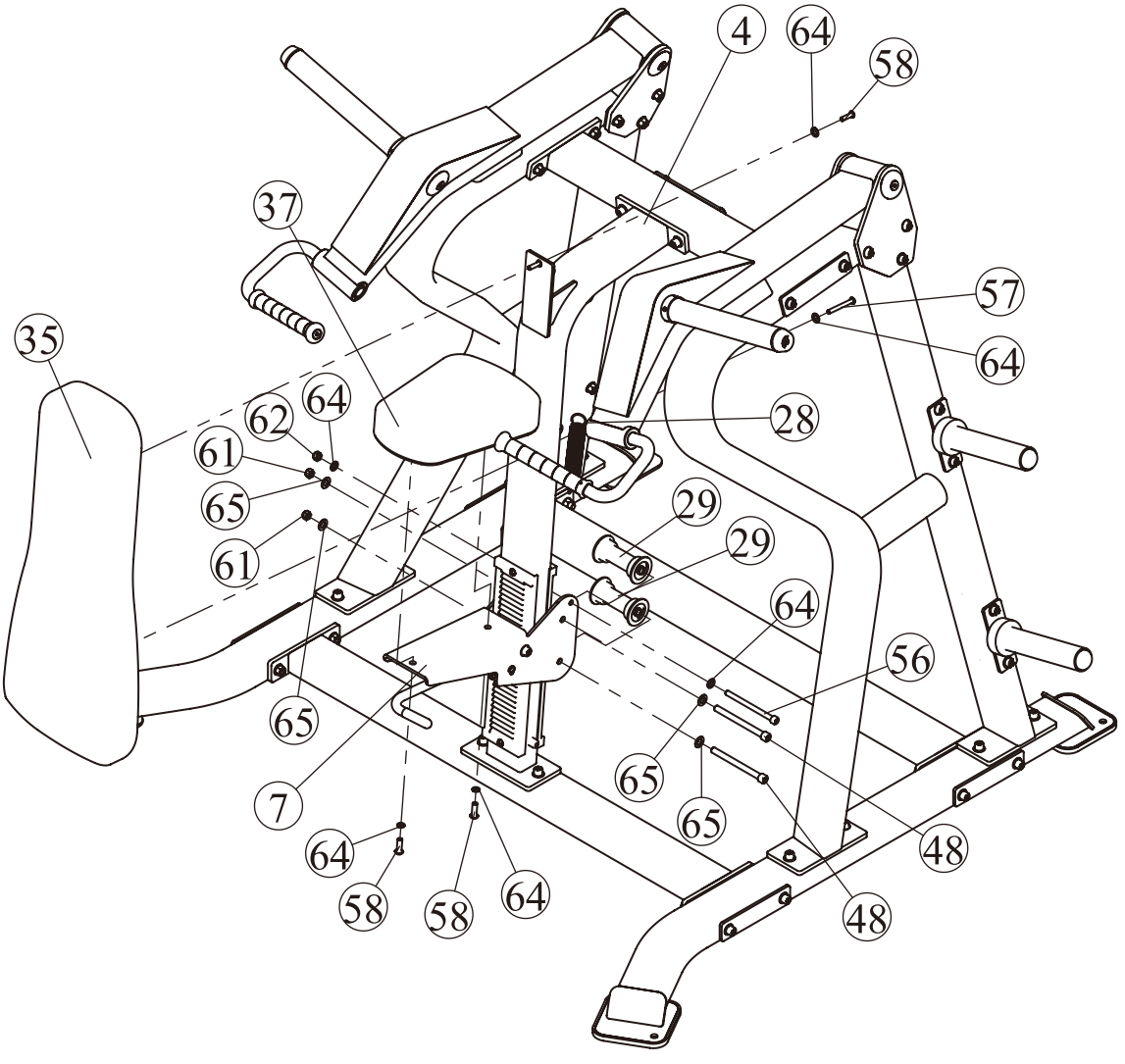

Adjust Instructions

Weight Plate Installation Requirements

1. Please use Olympic Weight Plate which hole is greater than Φ50mm and external diameter is less than Φ450mm.
2. The total weight of one side can not be greater than 150kg.
3. This equipment does not contains Weight Plate.

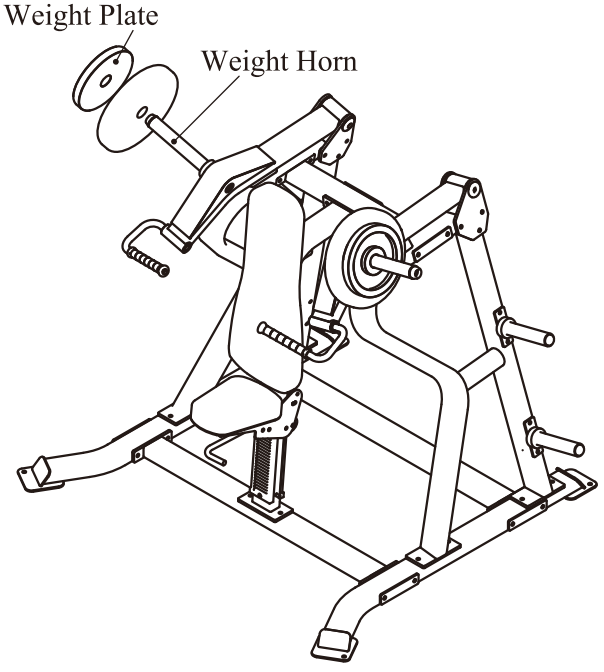

Seat Pad adjustment

Hold the adjustable handle, move the seat pad to desired position, and then release the handle.

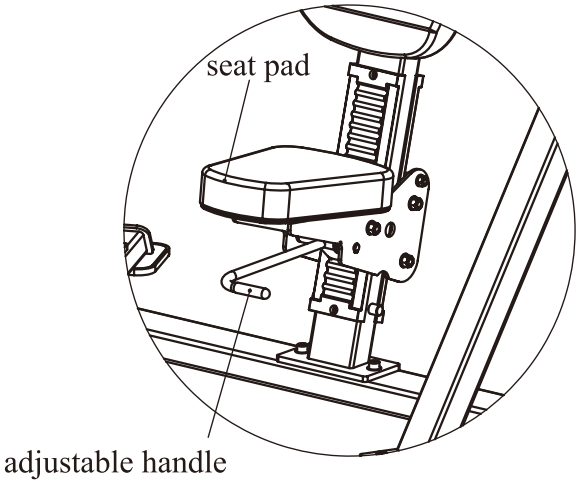

Exercise Instructions

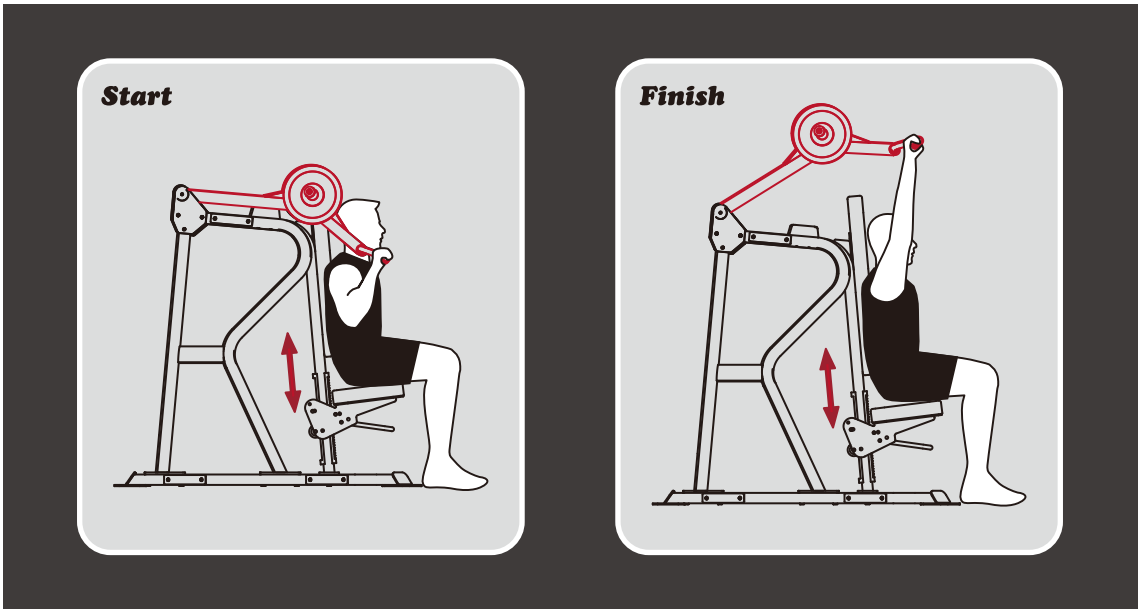

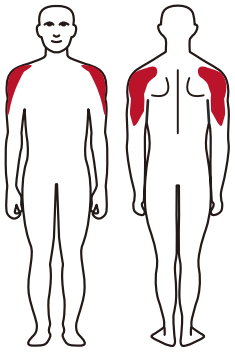

Exercise Instructions

1. Select an appropriate weight.
2. Adjust seat pad to the desired position.
3. Push handles straight up.
4. Pause slightly then slowly return to the starting position.

Maintenance Schedule

ROUTINE	COMMERCIAL MAINTENANCE	HOME MAINTENANCE	LATEST DATE ENTRY						
Inspect; Links, Pull Pins, Snap Locks, Swivels, Weight Stack Pins	DAILY	WEEKLY							
Clean; Upholstery	DAILY	WEEKLY							
Inspect; Cables or Belts and their tension	DAILY	WEEKLY							
Inspect; Accessory Bars, and Handles	WEEKLY	3 MONTHS							
Inspect; All Decals	WEEKLY	3 MONTHS							
Inspect; All Nuts and Bolts, Tighten if needed	WEEKLY	3 MONTHS							
Inspect; Anti-Skid Surface	WEEKLY	3 MONTHS							
Clean & Lubricate; Guide Rods with a Teflon (PTFE) based lubricant (Superlube)	MONTHLY	3 MONTHS							
Lubricate; Seat Sleeves, Turcite Bushings, Linear Bearing	MONTHLY	3 MONTHS							
Clean and Wax; All Glossy Finishes	6 MONTHS	YEARLY							
Repack with Grease; Linear Bearings	6 MONTHS	YEARLY							
Replace; Cables, Belts and Connecting Parts	YEARLY	3 YEARS							

Your equipment comes with a commercial maintenance decal. For personal, in home use, please follow the home maintenance schedule listed above.

General Maintenance Information

Links, Pull-Pins, Snap Hooks, Swivels, Weight Stack Pins:
* Check all pieces for signs of visible wear or damage.
* Check springs in snap hooks and pull-pins for proper tension and alignment.
* If the spring sticks or has lost its rigidity, replace it immediately.

Upholstery:
* To ensure prolonged upholstery life and proper hygiene, all upholstered pads should be wiped down with a damp cloth after every workout.
* Periodically take the time to use a mild soap or an approved vinyl upholstery cleaner to deter the onset of cracking or drying. Avoid using any abrasive cleaners or cleaners not intended for use on vinyl.
* Replace ripped or warn upholstery immediately.
* Keep sharp or pointed objects clear of all upholstery.

Decals:
* Inspect and familiarize yourself with any safety warnings or other user information posted on each decal.

Nuts and Bolts:
* Inspect all nuts and bolts for any loosening and tighten if needed.
* Go through a re-tightening sequence periodically to ensure that all hardware is tensioned proper.

Anti-Skid Surfaces:
* These surfaces are designed to supply secure footing and need to be replaced if they appear worn or become slippery.

Belts and Cables:
* We uses only high quality belt, and mil-spec cables.
* Visually inspect the belts and cables for fraying, cracking, peeling or discoloration.
* While the machine is not in use, carefully run your fingers along the belt or cable to feel for thinning or bulging areas.
* Replace belts and cables immediately at the first signs of damage or wear. Do not use equipment until belts or cables have been replaced.

Belt and Cable Tension:
* Referring to the Owners Manual, when belts or cables are used check all bolts attachments to be sure they are properly attached.
* Check slack in cables and re-adjust cable tension if needed.

Seat Sleeves, Guide Rods:
* Wipe down adjusting tubes with a dust free rag before applying lubricant.
* Lubricate seat sleeves and Guide Rods with a Silicon or Teflon based lubricant spray.

Linear Bearings:
* Referring to the Owners Manual carefully disassemble the bearing from its housing and place a finger full of light grease (lithium, super lube, etc.) into the inside of the bearing. Using your finger, press the grease into the ball-bearings and their tracks. repeat until the ball-bearing tracks are full of grease. Insert the shaft back into the bearing and wipe off excess grease.

PLEASE KEEP THIS FOR YOUR RECORDS

Weight Training Tips

Use this manual to guide you through the basic exercises you can perform on your equipment. To gain maximum results and avoid possible injury, consult a fitness professional to develop your complete exercise program.

Always consult your physician before starting any exercise program.

To be successful in your exercise program, it is important to develop an understanding of the basic principles of strength training. Now that you have your equipment, it is only natural that you want to get started immediately. First, determine a set of realistic goals and objectives for yourself. By deciding on an exercise plan that is right for you prior to starting, you will contribute significantly to your success.

Warm up properly before engaging in weight resistance training. Stretching, yoga, jogging, calisthenics or other cardiovascular exercise can help prepare your body for the heavier workload of lifting weights.

Learn how to perform the exercise correctly before using heavy weight. Correct form is important to avoid injury and to ensure that you work the proper muscle groups.

Know your limitations. If you are new to weight training or are embarking on an exercise regimen after a long layoff, start slowly and build foundational strength over a longer period of time.

Pay attention to your breathing. Exhale when you exert is a general rule of thumb. Never hold your breath.

SYSTEM CERTIFICATION ISO 9001 SGS
SYSTEM CERTIFICATION ISO 14001 SGS
SYSTEM CERTIFICATION OHSAS 18001 SGS
SYSTEM CERTIFICATION ISO 10015 SGS