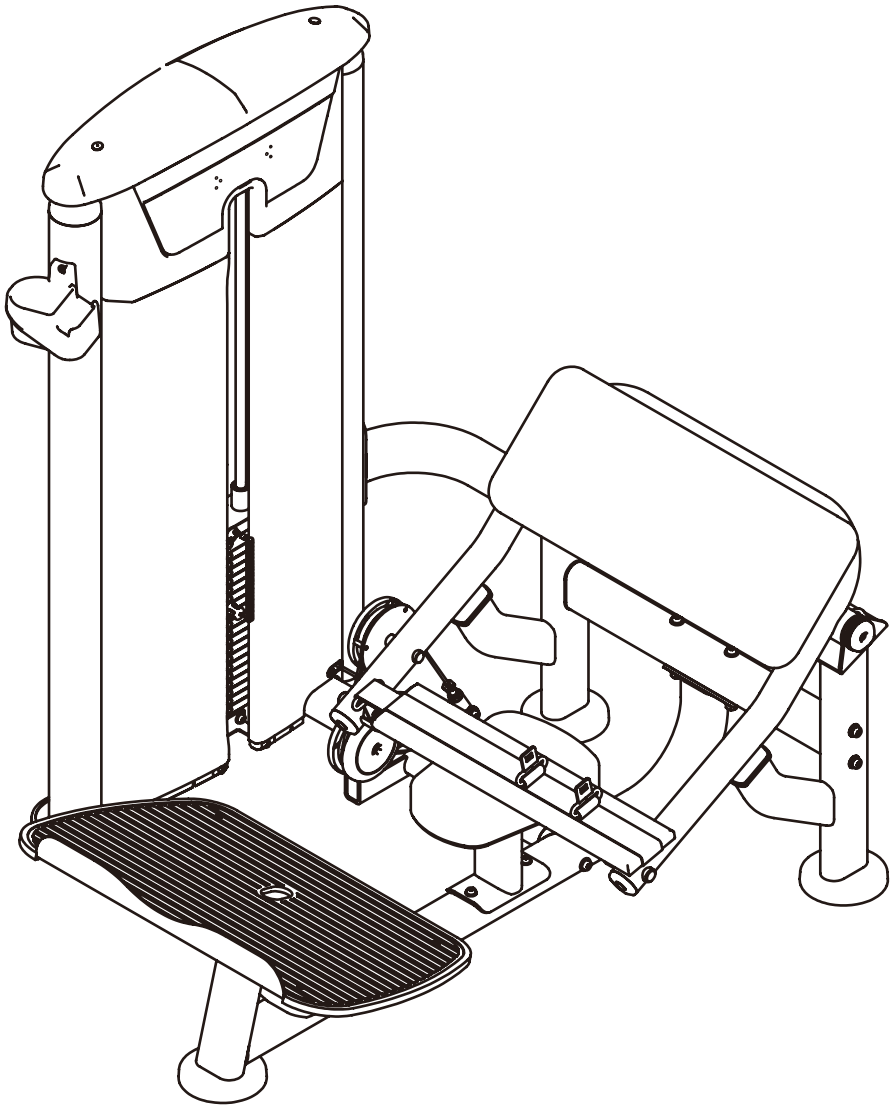

IT9538

HIP THRUST

OWNER'S MANUAL

24A

CAUTION! Read all precautions and instructions in this manual before using this equipment.

Table Of Contents

CAUTION!

Read all precautions and instructions in this manual before using this equipment.

Important Safety Instructions---------- 3

Instructions---------- 5

Exploded View and Parts List---------- 6

Measurement Guide---------- 13

Assembly Instructions---------- 14

Assembly---------- 15

Adjust Instructions and Exercise Instructions---------- 27

Maintenance Schedule---------- 28

General Maintenance Information---------- 29

Weight Training Tips---------- 30

Please assemble according to the actual **Weights and Shroud** you buy !

Important Safety Instructions

Before beginning any fitness program, you should obtain a complete physical examination from your physician. When using exercise equipment, basic precautions should always be taken, including the following:

1. Read all instructions before using the equipment.
   These instructions are written to ensure your safety and to protect the unit.

2. Use the equipment only for its intended purpose as described in this guide.
   Do not use accessory attachments that are not recommended by the manufacturer: such attachments might cause injuries.

3. The product should only be used on a level surface and is with 0.6 meters space around the product.
   Do not use the equipment outdoors.

4. Do not allow children on or near the equipment. And children are not allowed to use this equipment.
   Teenagers should use this equipment with adult supervision.

5. Do not overexert yourself or work to exhaustion.
   Do not attempt to lift more weight than you can control safely.
   If you feel any pain or abnormal symptoms, stop your workout immediately and consult your physician.

6. This equipment is not used as medical apparatus and instruments.

7. Never operate the unit when it has been dropped or damaged.
   Never drop or insert anything into any opening in the equipment.
   Always check the unit and its cables before each use. Make sure that all fasteners and cables are secure and in good working condition.
   Frayed or worn cables can be dangerous and may cause injury. Periodically check these cables for any indication of wear.
   Keep hands, limbs, loose clothing and long hair well out of the way of moving parts.

8. Be careful when getting on or off the equipment.

9. Wear proper exercise clothing and shoes for your workout, no loose clothing.

Important Safety Instructions

Personal Safety During Assembly

Read each step in the assembly instructions and follow the steps in sequence. Do not skip ahead. If you skip ahead, you may learn later that you have to disassemble components and that you may have damaged the equipment.

Assemble and operate the equipment on a solid, level surface. Locate the unit a few feet from walls or furniture to provide easy access. The equipment is designed for your enjoyment. By following these precautions and using common sense, you will have many safe and pleasurable hours of healthful exercise with the equipment.

Training Area and Free Area

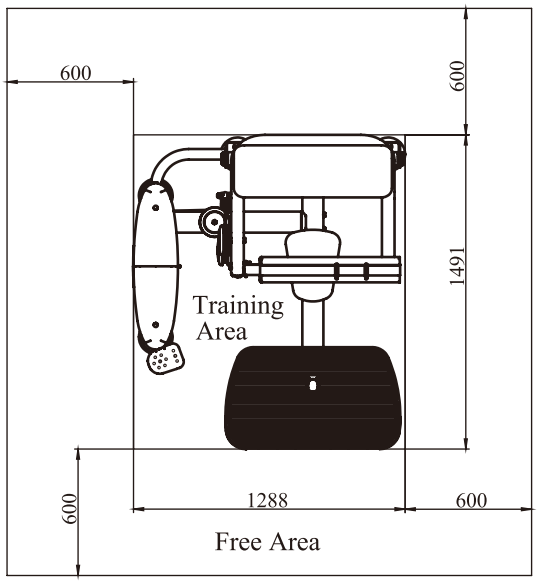

Specifications

Class: S

Maximum Wt. Capacity: 134kg/ 295lbs

Maximum User Weight: 150kg/ 330lbs

Product Dimension: 1491*1288*1508mm

Product Total Surface: 1491*1288mm

Instructions

Before beginning assembly please take the time to read instructions thoroughly. Please use the various lists in this manual to make sure that all parts have been included in your shipment. When ordering, use part number and description from the lists. Use only our replacement part when servicing. Failure to do so will void your warranty and could result in personal injury.

The equipment is designed to provide the smoothest, most effective exercise motion possible. After assembly, you should check all functions to ensure correct operation. If you experience problems, first recheck the assembly instructions to locate any possible errors made during assembly. If you are unable to correct the problem, call your authorized dealer. Be sure to have your serial number and this manual when calling. When all parts have been accounted for, continue on.

Tools Required

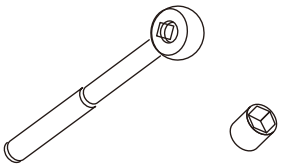

Ratchet Wrench and Socket

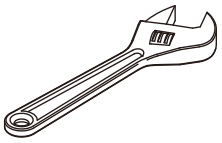

Adjustable Wrench

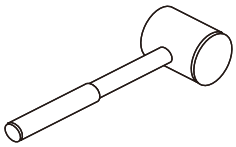

Rubber Mallet

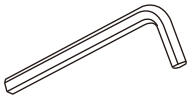

Hex Key Wrench Set

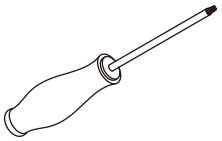

Phillips Screwdriver

Exploded View and Parts List

Overall

Item No.	Part No.	Description	QTY
1	IT953201ASSY	Weight Stack Frame	1
2	IT950121ASSY	Top Bracket ASSY	1
3	IT95012300	Rear Bracket	1
4	IT95014200	Top Plate	1
5	IT95014400	Guide Rod Φ19*1242	2
6	IT95015100	Top Cover	1
7	IT95015200	Training Placard Cover	1
8	IT95015500	Top Rear Shroud	1
9	IT95016600	Cup Holder	1
10	IT950122ASSY	Bottom Bracket ASSY	1
11	IT95380200	Tied To The Ground Frame	1
12	IT953803ASSY	Side Frame ASSY Ⅰ	1
13	IT953804ASSY	Side Frame ASSYⅡ	1
14	IT95380500	Rear Connecting Frame	1
15	IT953806ASSY	Rotating Frame ASSY	1
16	IT953807ASSY	Ground Connection Frame ASSY	1
17	IT953808ASSY	Pedal Frame ASSY	1
18	IT95380900	Cushion Frame ASSY	1
19	IT95381000	Connecting Frame	1
20	IT95031200	Elliptical Plate	3
21	SD1000B3000ASSY	Ground Support	3
22	IT95057800	4.5" Pulley(Excluding liner)	1
23	SG500110400V5	4.5" Pulley	4
24	IT95382100	4.5"Aluminum Pulley	1
25	ABS10191700V1	Adjustment Belt	1
26	ABS10191600V1	Waist Belt	1
27	IF93242100	shaft	2
28	IT95016400	Pulley cover	4
29	IT95385600	Cable ASSY	1
30	IT95016000	Plastic Cover	1
31	IT90012000V1	Selector Pin W/Coil	1
32	FE97212000	Circle Ring Φ62.5*5	4
33	FE97211900	Cap Φ60	4
34	IF93062200	Large Washer	4
35	ABS10191500	Spacer Sleeve Φ20*14	2
36	IT95031300	Support Sleeve Φ18*49.5	6
37	IT95016500	Spout Plug Φ16.5*6.88	2

Exploded View and Parts List

Overall

Item No.	Part No.	Description	QTY
38	IT80023000	Rubber Pad Φ63.5*25.4	2
39	HFOPT900-04A0602	Spring	2
40	IT95016100	Guide Rod Fixing Sleeve Φ25*Φ19*45	2
41	FE97122300	Threaded Column	3
42	FE97122100	Pulley Spacer Sleeve Φ22*17.5	2
43	GB818M6*10DHS2	Cross Recessed Pan Head Screw M6*10	4
44	GB818M6*16DHS2	Cross Recessed Pan Head Screw M6*16	4
45	GB818M6*20DHS2	Cross Recessed Pan Head Screw M6*20	18
46	GB70M8*20N19	Socket Head Cap Screw M8*20	2
47	GB70BTM10*25DN18NL	Socket Head Cap Screw M10*25	10
48	GB70BTM10*30DN18	Socket Head Cap Screw M10*30	2
49	GB70BTM10*50DN18	Socket Head Cap Screw M10*50	3
50	GB70BTM10*60DN18	Socket Head Cap Screw M10*60	1
51	GB70BTM10*75DN18	Socket Head Cap Screw M10*75	6
52	GB70BTM10*80DN18	Socket Head Cap Screw M10*80	2
53	GB70BTM12*30DN18NL	Socket Head Cap Screw M12*30	2
54	GB70BTM12*35DN18	Socket Head Cap Screw M12*35	2
55	GB70BTM12*80DN18	Socket Head Cap Screw M12*80	6
56	GB70BTM12*125DN18	Socket Head Cap Screw M12*125	2
57	GB70BTM12*135DN18NL	Socket Head Cap Screw M12*135	2
58	GB9312N19	Spring Washer Φ12	8
59	GB958DN2	Flat Washer Φ9*Φ16*1.6	2
60	GB9510DN2	Flat Washer Φ11*Φ20*2	28
61	GB9512DN2	Flat Washer Φ13*Φ24*2.5	8
62	NM10DN2	Nylon Lock Nut M10	10
63	NM12DN2	Nylon Lock Nut M12	2
64	IT95015300	Front Shroud	1
65	IT95015400	Right Front Shroud	1
66	IT95015600	Rear Shroud	1
67	IT95385100	Back Cushion	1
68	IT95153100	Seat Cushion	1
69	IT950122ASSY	Bottom Bracket ASSY	1
70	LW200BS	Wrench Φ6*117	1
71	NBS6DHS	Hex Key S=6	1
72	NBS8DHS	Hex Key S=8	1
73	YHY	Lube	1
74	C015PL5700	Flat Washer Φ12.2*Φ30*3.5	2

Exploded View and Parts List

Overall

Full Shroud

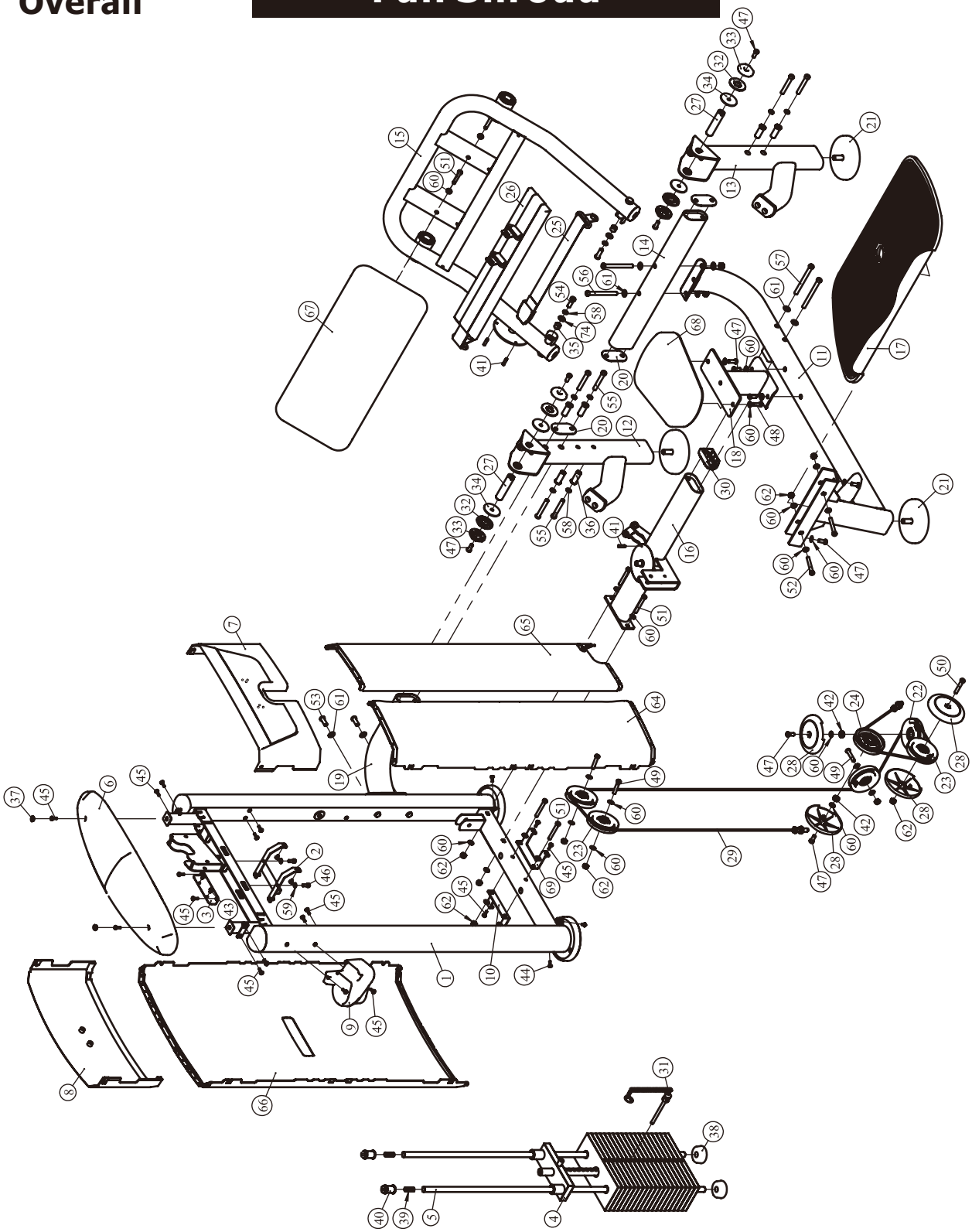

Exploded View and Parts List

Weight Stack Frame ASSY

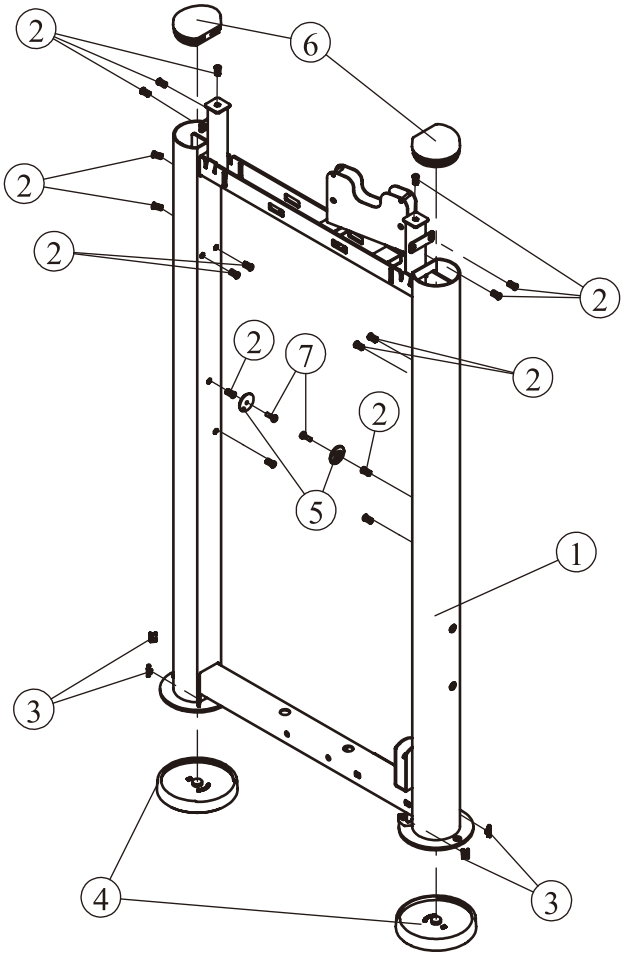

Grade No.	Part No.	Description	QTY
1.1	IT95320100	Weight Stack Frame	1
1.2	GB17880.5M6*16.5DS17	Rivet Nut M6	16
1.3	AC32705800	U-nut M6	4
1.4	IT95015700	Foot Plate	2
1.5	IT95015900	Plastic Block	2
1.6	IT95015800	Plug Φ95*81.1	2
1.7	GB818M6*20DHS2	Cross Recessed Pan Head Screw M6*20	2

Exploded View and Parts List

Side Frame ASSY I

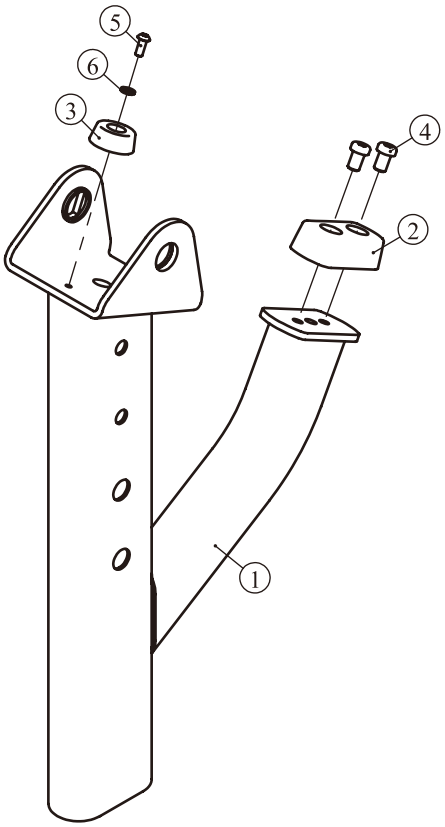

Side Frame ASSY II

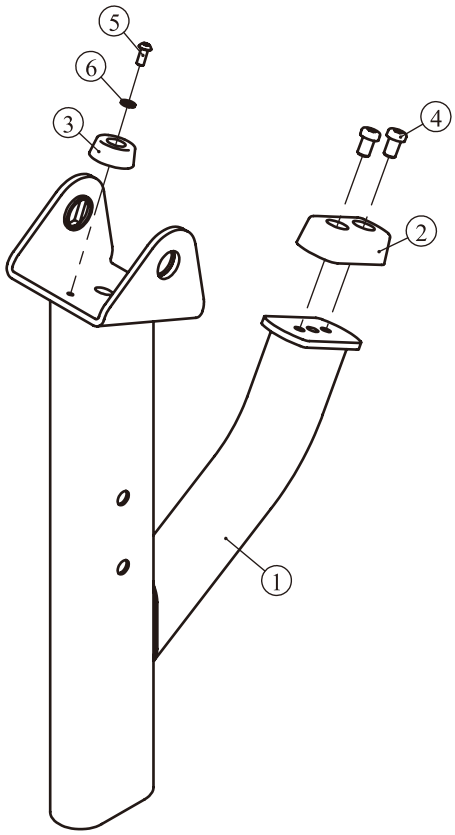

Grade No.	Part No.	Description	QTY
12.1	IT95380300	Side Frame I	1
12.2	RS17000400	Buffer pad	1
12.3	PBG10004	Rubber pad	1
12.4	GB70BTM10*16DN18NL	Socket Head Cap Screw M10*16	2
12.5	PNLM6*15DN20	Button Head Cap Screw M6*15	1
12.6	GB956DS2	Flat Washer Φ6.6*Φ12*1.6	1

Grade No.	Part No.	Description	QTY
13.1	IT95380400	Side Frame II	1
13.2	RS17000400	Buffer pad	1
13.3	PBG10004	Rubber pad	1
13.4	GB70BTM10*16DN18NL	Socket Head Cap Screw M10*16	2
13.5	PNLM6*15DN20	Button Head Cap Screw M6*15	1
13.6	GB956DS2	Flat Washer Φ6.6*Φ12*1.6	1

Exploded View and Parts List

Rotating Frame ASSY

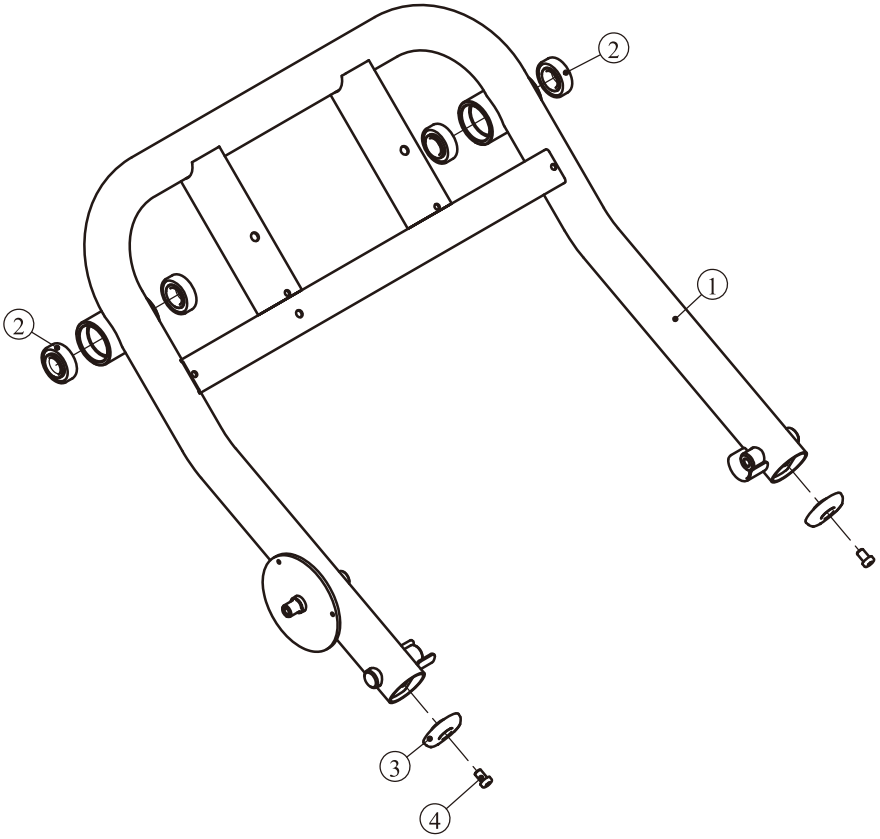

Grade No.	Part No.	Description	QTY
15.1	IT95380600	Rotating Frame	1
15.2	GB2766205-2RSC3TZ	Bearing	4
15.3	FE97211900	Cap Φ60	2
15.4	GB70BTM10*16DN18NL	Socket Head Cap Screw M10*16	2

Exploded View and Parts List

Ground Connection Frame ASSY

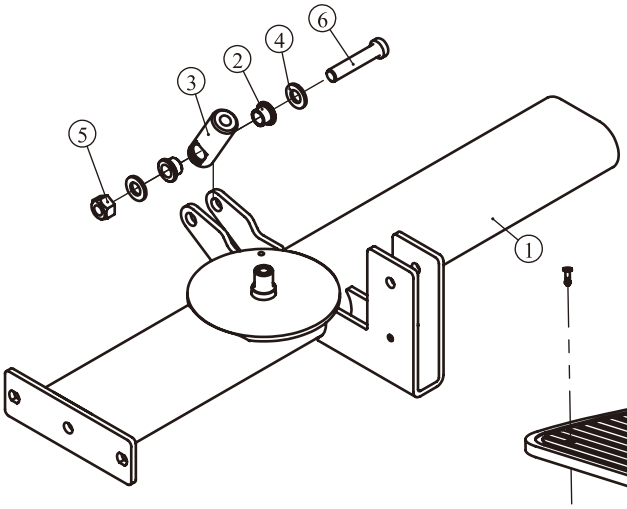

Grade No.	Part No.	Description	QTY
16.1	IT95380700	Ground Connection Frame	1
16.2	BNH0528	Copper Sleeve	2
16.3	ROC-IT1013600V1	Cable Fixing Part	1
16.4	GB9512DN2	Flat Washer Φ13*Φ24*2.5	2
16.5	NM12DN2	Nylon Lock Nut M12	1
16.6	GB70BTM12*60DN18	Socket Head Cap Screw M12*60	1

Pedal Frame ASSY

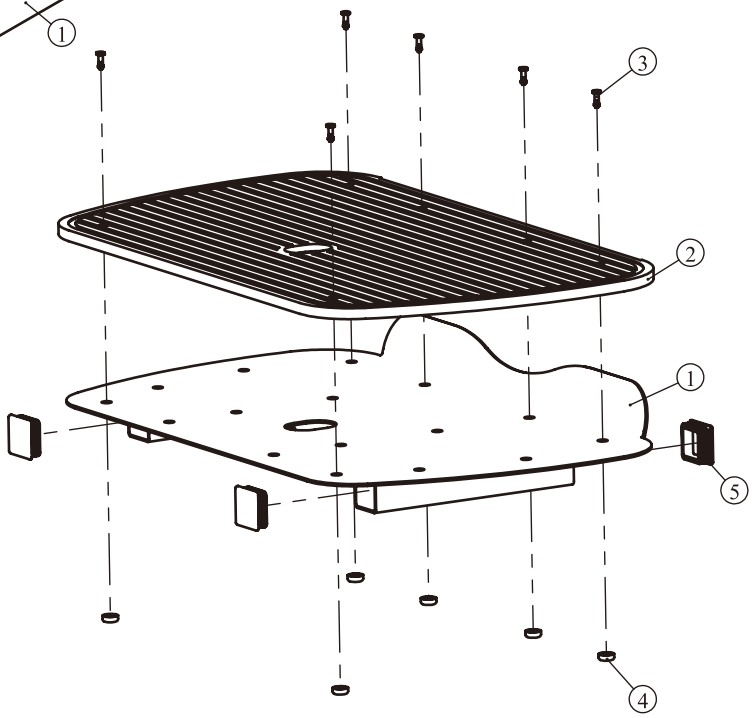

Grade No.	Part No.	Description	QTY
17.1	IT95380800	Pedal Frame	1
17.2	SL70064000	Rubber Foot Plate Cover	1
17.3	SL70064100	Plastic Clip	6
17.4	SL70064200	Cap Washer	6
17.5	KPSFID3000	Pipe Plug50.8	4

Measurement Guide

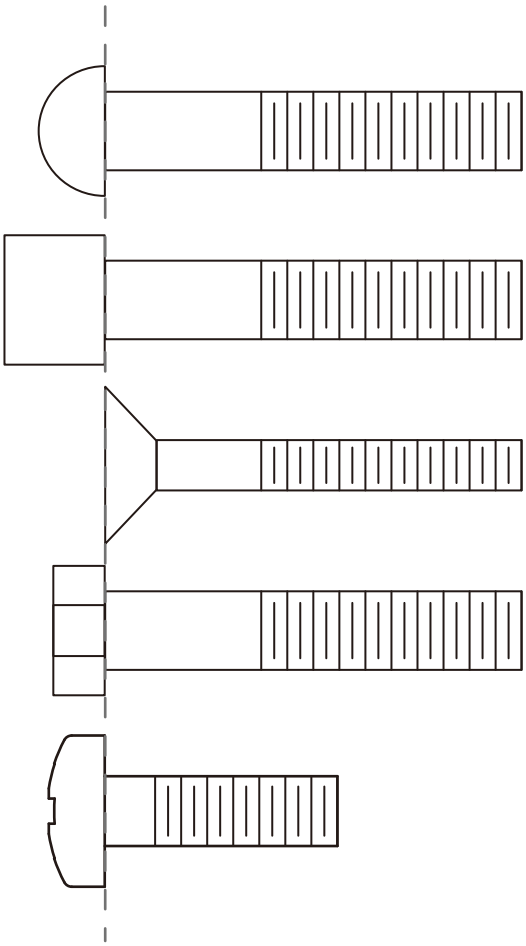

BHCS = Button Head Cap Screw

SHCS = Socket Head Cap Screw

FHCS = Flat Head Cap Screw

HHB = Hex Head Bolt

CRPHS = Cross Recessed Pan Head Screw

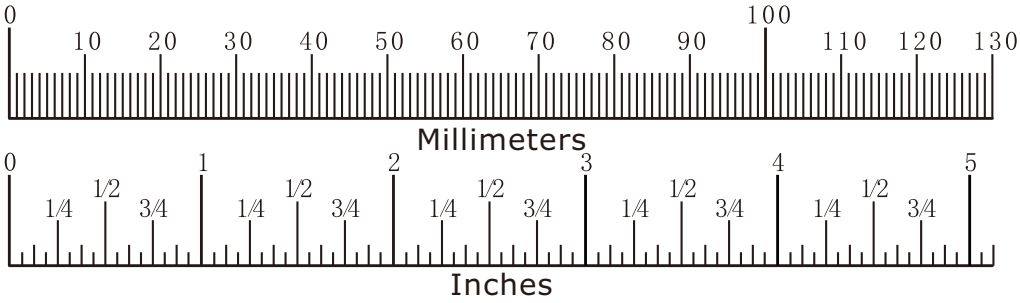

Diameter of bolt (mm/inch)	M6(1/4")	M8(5/16")	M10(3/8")	M12(1/2")	M16(5/8")
Tightening torque (N.m)	9~12	22~30	45~59	78~104	193~257
Operational methods for adult men	The strength of the wrist	The strength of the wrist and forearm	The strength of the entire arm	The strength of the arm and upper body	with all strength

Assembly Instructions

Assembly of the equipment takes professional installers about 2 hours. If this is the first time you have assembled this type of equipment, plan to spend more time. It is strongly recommended to assemble the equipment by professional installers. You may find it quicker, safer, easier to assemble this equipment with the help of a friend, as some of components may be large, heavy or awkward to handle alone. It is important that you assemble your product in a clean, clear, uncluttered area. This will enable you to move around the product while you are fitting components and reduce the possibility of injury during assembly.

⚠ NOTE

As with any assembled part, proper alignment and adjustment is critical. While tightening the fasteners, be sure to leave room for adjustments. Do not fully tighten the fasteners until instructed to do so. Be careful to assemble the components in the sequence presented in this guide.

Assembly

STEP 1

1. Attach three Ground Support (#21) to the Tied To The Ground Frame (#11), Side Frame ASSY I (#12) and Side Frame ASSY II (#13).
2. Attach the Rear Connecting Frame (#14) to Tied To The Ground Frame (#11), using:
   two M12*125 SHCS (#56)
   four Φ13*Φ24*2.5 Flat Washer (#61)
   two M12 Nylon Lock Nut (#63)
3. Attach the Side Frame ASSY I (#12) and Side Frame ASSY II (#13) to Rear Connecting Frame (#14), using:
   four M12*80 SHCS (#55)
   four Φ12 Spring Washer (#58)
   four Φ18*49.5 Support Sleeve (#36)
   two Elliptical Plate (#20)

Note: No Need To Tighten Bolts.

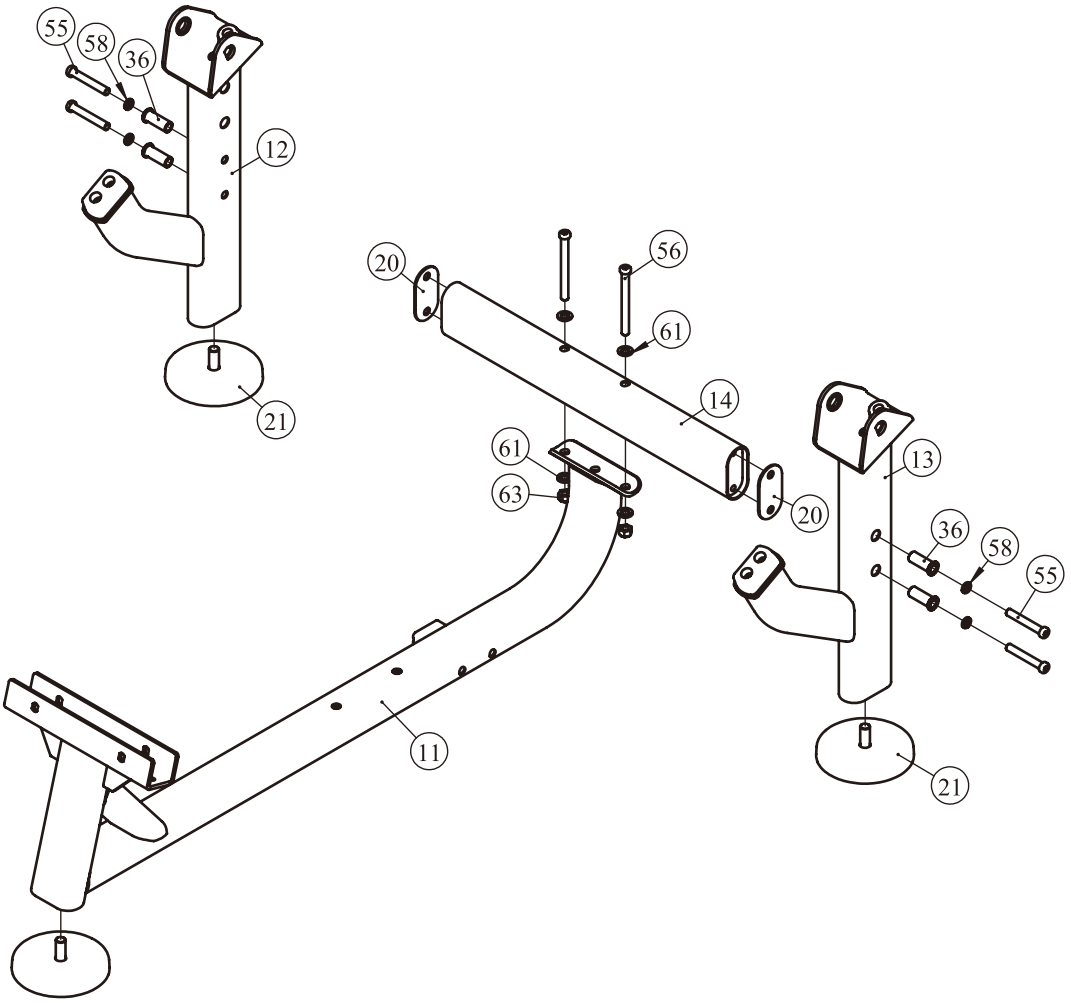

Assembly

STEP 2

1. Connect the Weight Stack Frame (#1) and Tied To The Ground Frame (#11) with Ground Connection Frame ASSY (#16), using:

two M12*135 SHCS (#57)	two Φ13*Φ24*2.5 Flat Washer (#61)
one Plastic Cover (#30)	two M10*75 SHCS(#51)
four Φ11*Φ20*2 Flat Washer (#60)	two M10 Nylon Lock Nut (#62)

2. Attach the Connecting Frame (#19) to Weight Stack Frame (#1) and Side Frame ASSY I (#12), using:

two M12*30 SHCS (#53)	two Φ13*Φ24*2.5 Flat Washer (#61)
two M12*80 SHCS (#55)	two Φ12 Spring Washer (#58)
two Φ18*49.5 Support Sleeve (#36)	one Elliptical Plate (#20)

Note: Wrench Tighten Bolts.

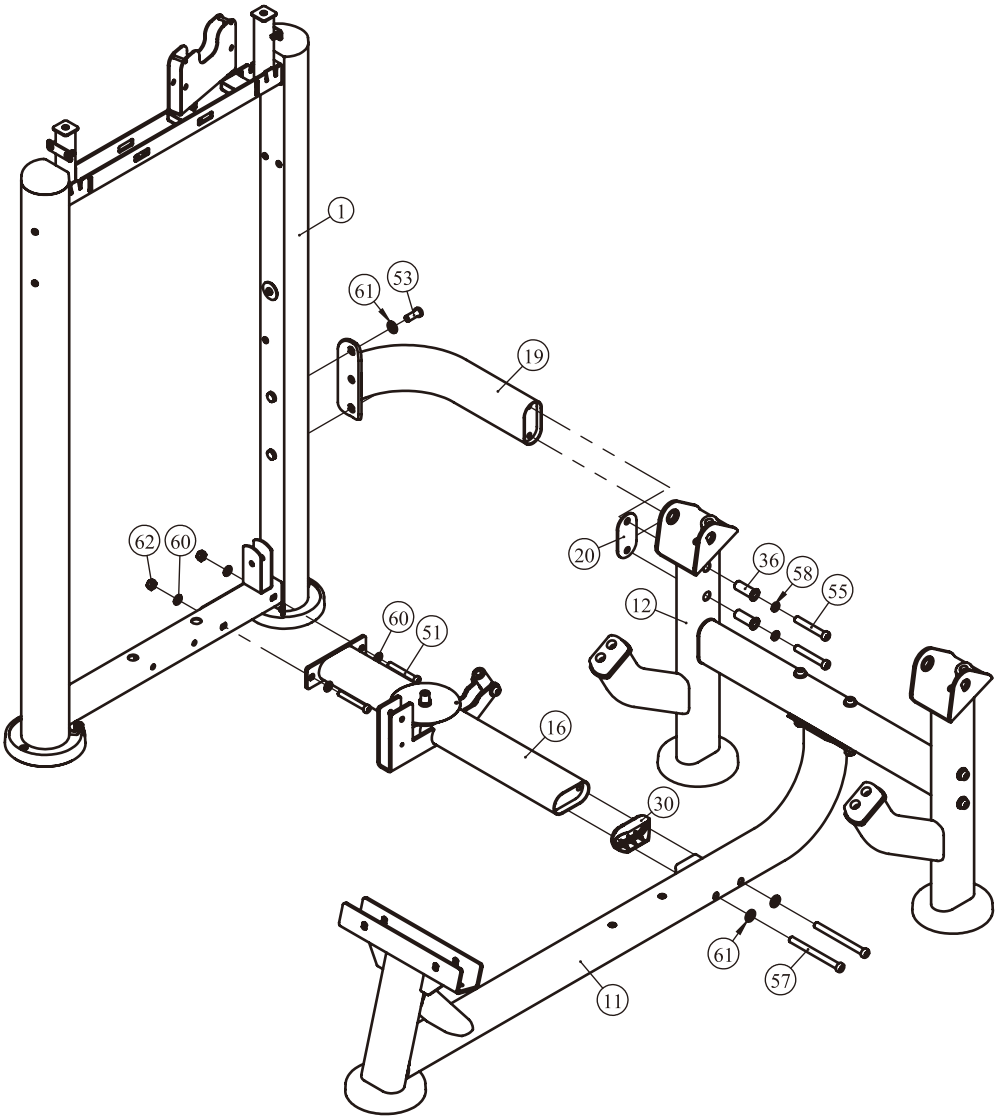

Assembly

STEP 3

1. Attach the Rotating Frame ASSY (#15) to Side Frame ASSY I (#12) and Side Frame ASSY II (#13), using:
   two Φ25*110 shaft (#27)
   four Φ62.5*5 Circle Ring (#32)
   four Cap Φ60 (#33)
   four Large Washer (#34)
   four M12*25 SHCS (#47)
2. Attach the Cushion Frame ASSY (#18) to Tied To The Ground Frame (#11), using:
   two M10*25 SHCS (#47)
   two Φ11*Φ20*2 Flat Washer (#60)
3. Attach the Pedal Frame ASSY (#17) to Tied To The Ground Frame (#11), using:
   two M10*25 SHCS (#47)
   two M10*80 SHCS (#52)
   six Φ11*Φ20*2 Flat Washer (#60)
   two M10 Nylon Lock Nut (#62)

Note: Wrench Tighten Bolts.

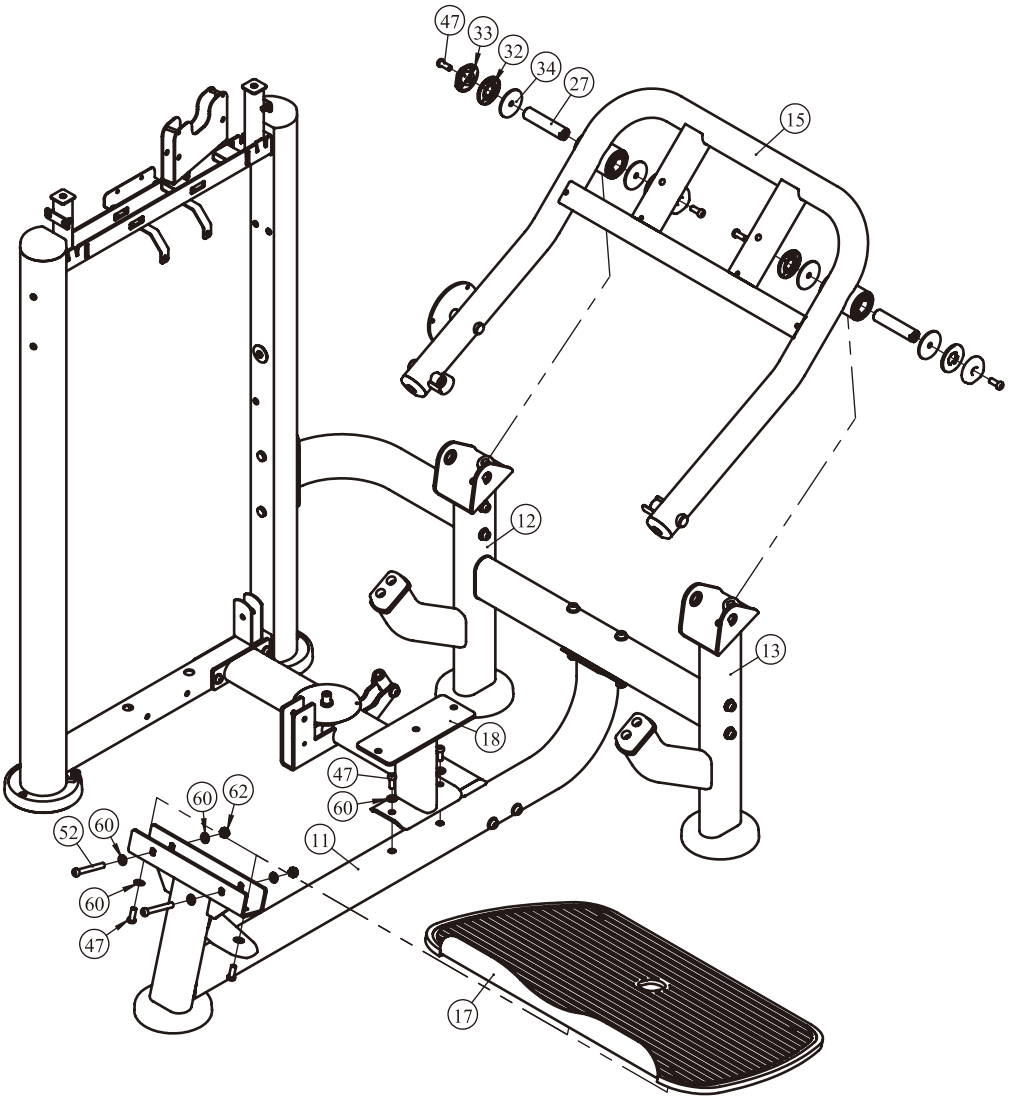

Assembly

STEP 4

1. Attach the Cable ASSY (#29) to the machine, using:
   one 4.5" Pulley (Excluding liner) (#22)
   four 4.5" Pulley (#23)
   one 4.5"Aluminum Pulley (#24)
   four Pulley cover (#28)
   two Φ22*17.5 Pulley Spacer Sleeve (#42)
   two M10*25 SHCS (#47)
   three M10*50 SHCS (#49)
   one M10*60 SHCS (#50)
   eight Φ11*Φ20*2 Flat Washer (#60)
   four M10 Nylon Lock Nut (#62)
2. Attach three Threaded Columns (#41) to Rotating Frame ASSY (#15) and Ground Connection Frame ASSY (#16).
3. Attach two Bottom Bracket ASSY (#10, #69) to Weight Stack Frame (#1), using:
   two M10*75 SHCS (#51)
   four Φ11*Φ20*2 Flat Washer (#60)
   two M10 Nylon Lock Nut (#62)
4. Attach the Top Bracket ASSY (#2) and Rear Bracket (#3) to Weight Stack Frame (#1), using:
   two M6*20 CRPHS (#45)
   two M8*20 SHCS (#46)
   two Φ9*Φ16*1.6 Flat Washer (#59)

Note: Wrench Tighten Bolts.

Assembly

STEP 4

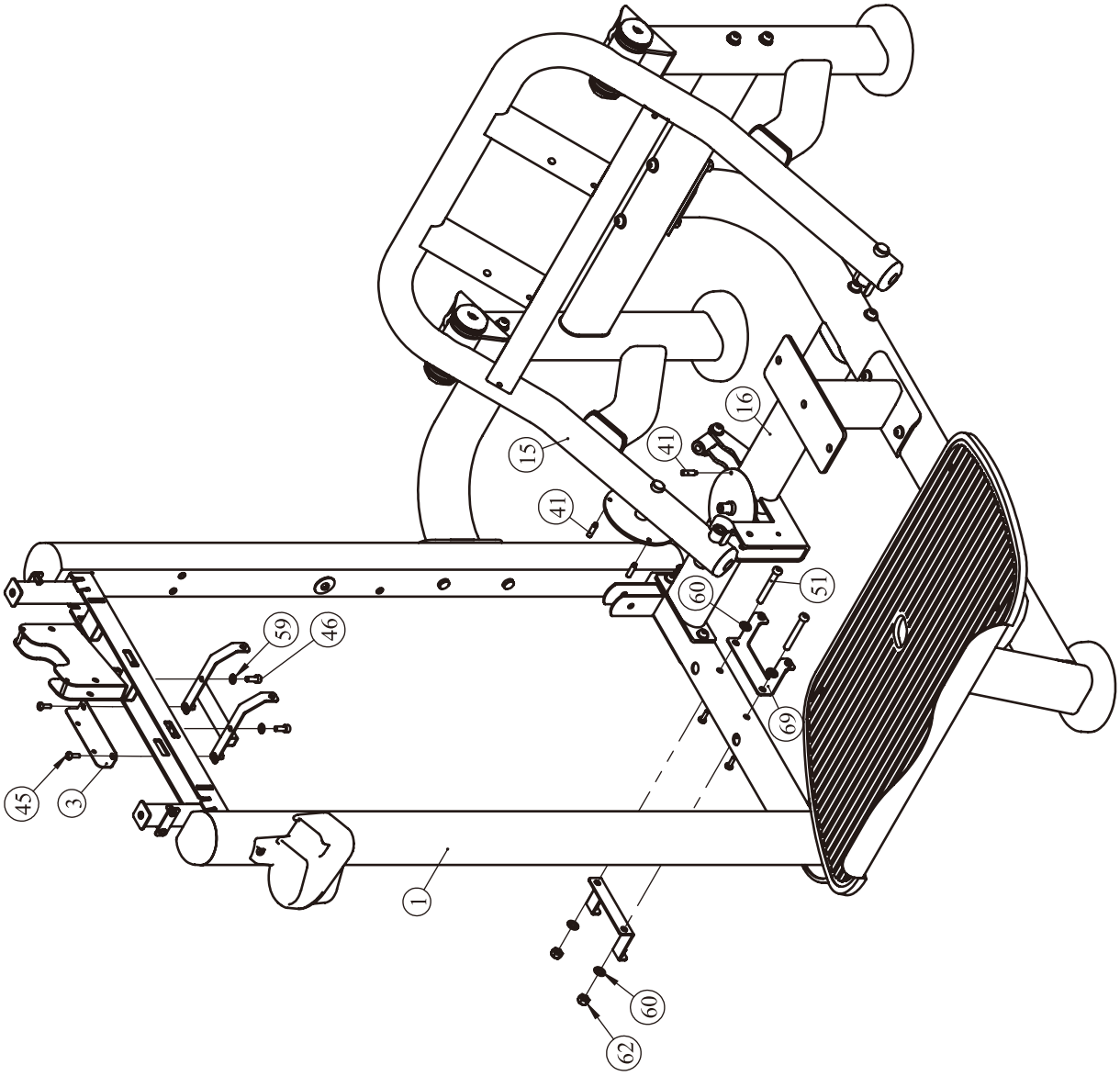

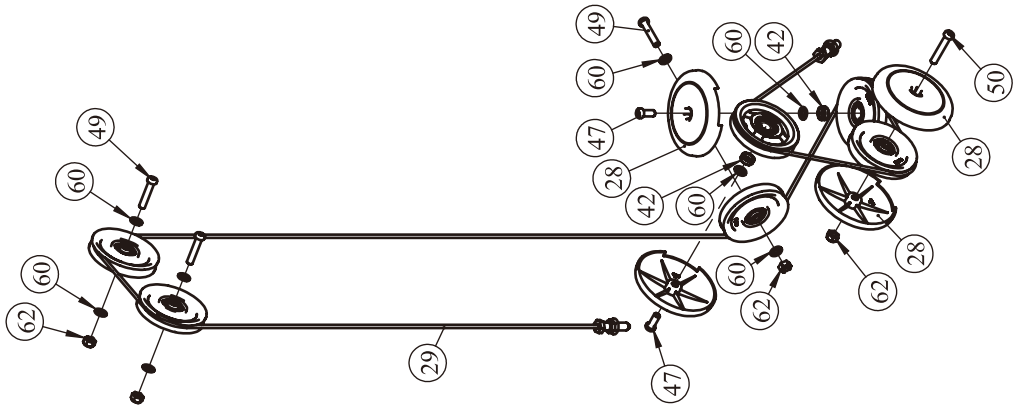

Assembly

Here is the assembly instruction for **160LBS Weights !**

STEP 5

Install the following parts onto the Weight Stack Frame (#1):

one Top Plate (#4)
two Guide Rod Φ19*1242 (#5)
one Selector Pin W/Coil (#31)
two Φ63.5*25.4 Rubber Pad (#38)
two Spring (#39)
two Φ25*Φ19*45 Guide Rod Fixing Sleeve (#40)
fifteen Weight Plate 10LBS (#101)
two weight stack space (#103)

Grade No.	Part No.	Description	QTY
101	FE97193100	10LBS Weight Plate	15
103	FEWS01ASSY	Weight Stack Space	2

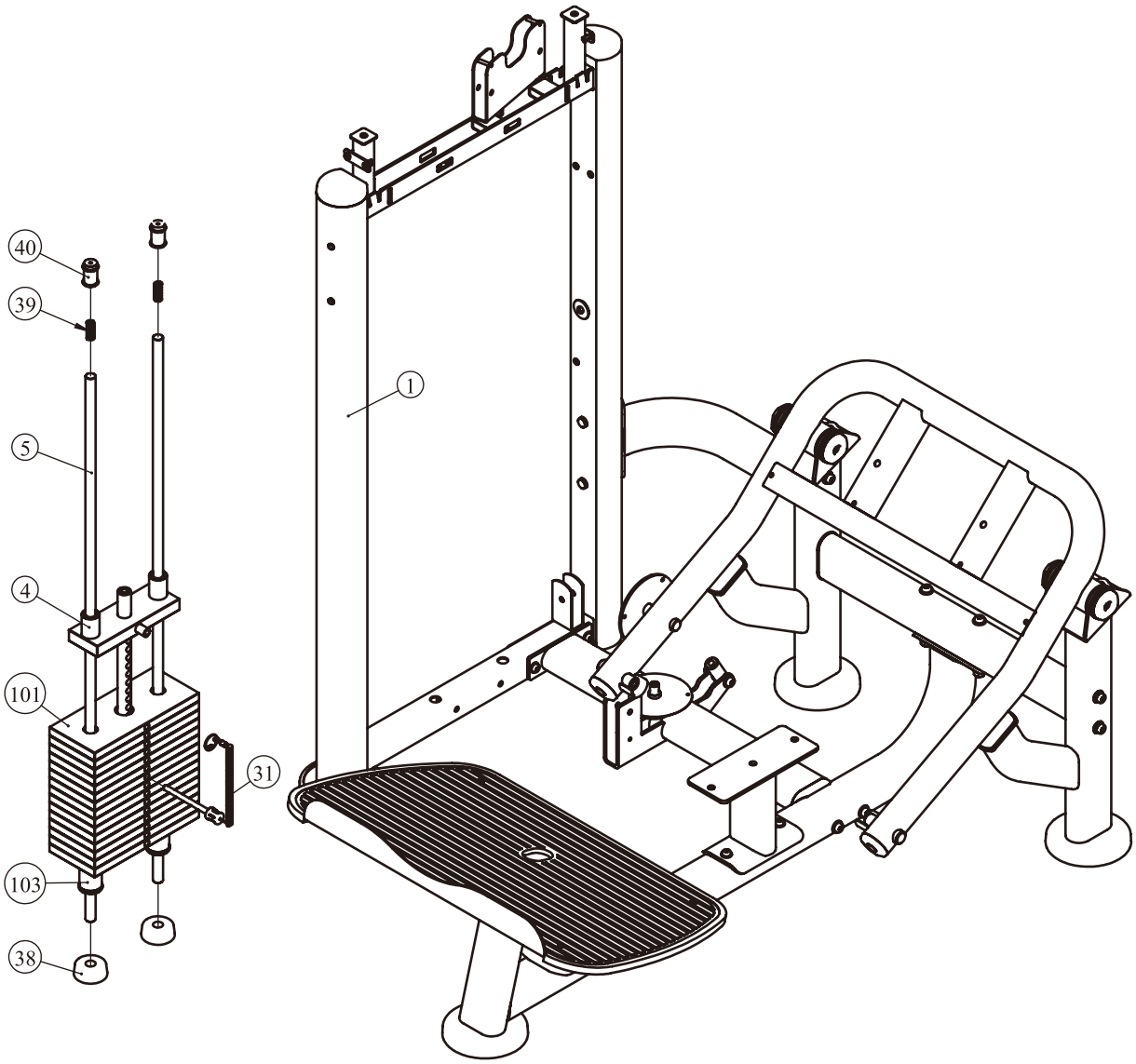

Assembly

Here is the assembly instruction for **200LBS Weights !**

STEP 5

Install the following parts onto the Weight Stack Frame (#1):

one Top Plate (#4)
two Guide Rod Φ19*1242 (#5)
one Selector Pin W/Coil (#31)
two Φ63.5*25.4 Rubber Pad (#38)
two Spring (#39)
two Φ25*Φ19*45 Guide Rod Fixing Sleeve (#40)
nineteen Weight Plate 10LBS (#101)

Grade No.	Part No.	Description	QTY
101	FE97193100	10LBS Weight Plate	19

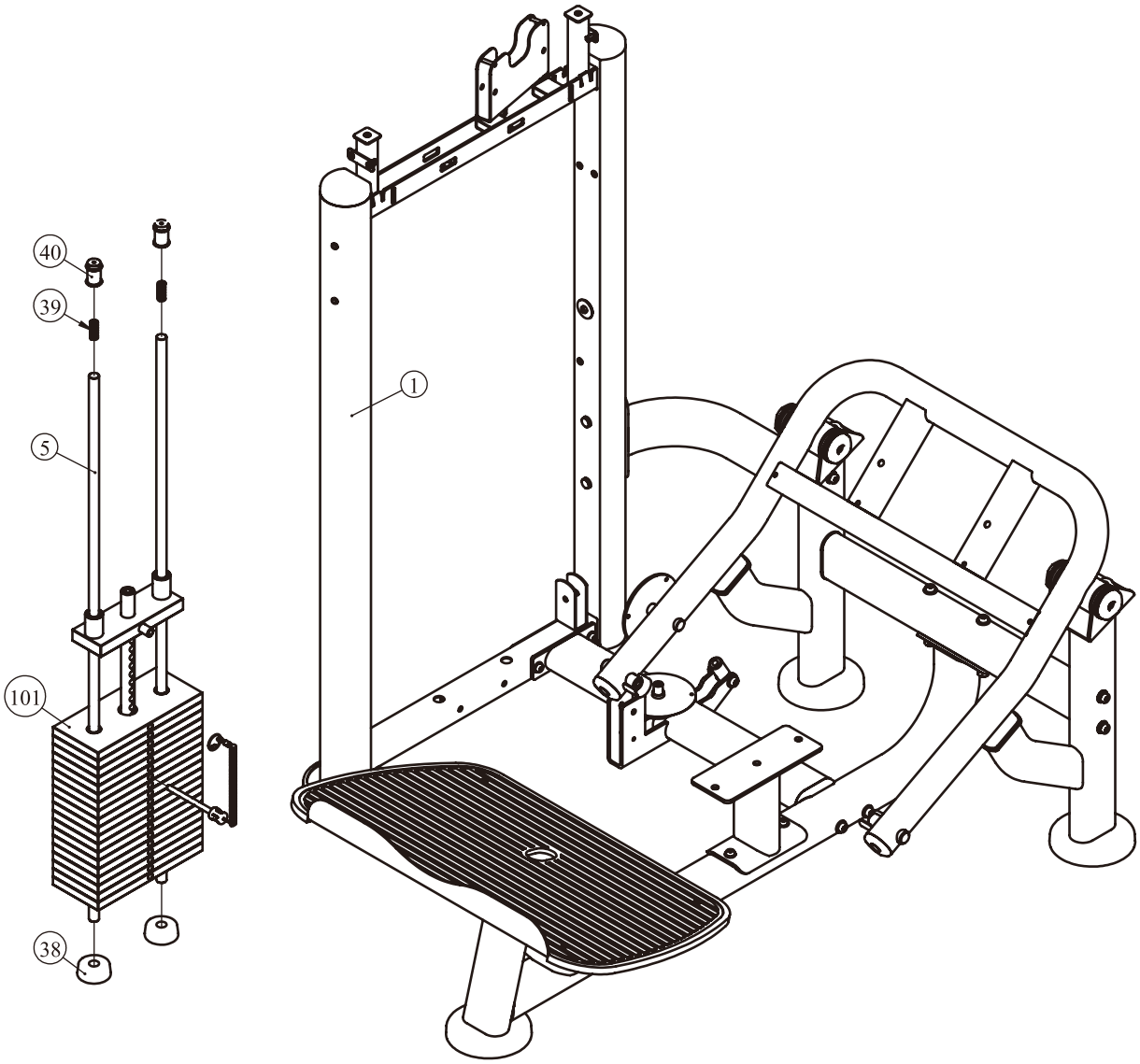

Assembly

Here is the assembly instruction for **235LBS Weights !**

STEP 5

Install the following parts onto the Weight Stack Frame (#1):

one Top Plate (#4)
two Guide Rod Φ19*1242 (#5)
one Selector Pin W/Coil (#31)
two Φ63.5*25.4 Rubber Pad (#38)
two Spring (#39)
two Φ25*Φ19*45 Guide Rod Fixing Sleeve (#40)
fifteen Weight Plate 15LBS (#102)
two weight stack space (#103)

Grade No.	Part No.	Description	QTY
102	FE97193200	15LBS Weight Plate	15
103	FEWS01ASSY	Weight Stack Space	2

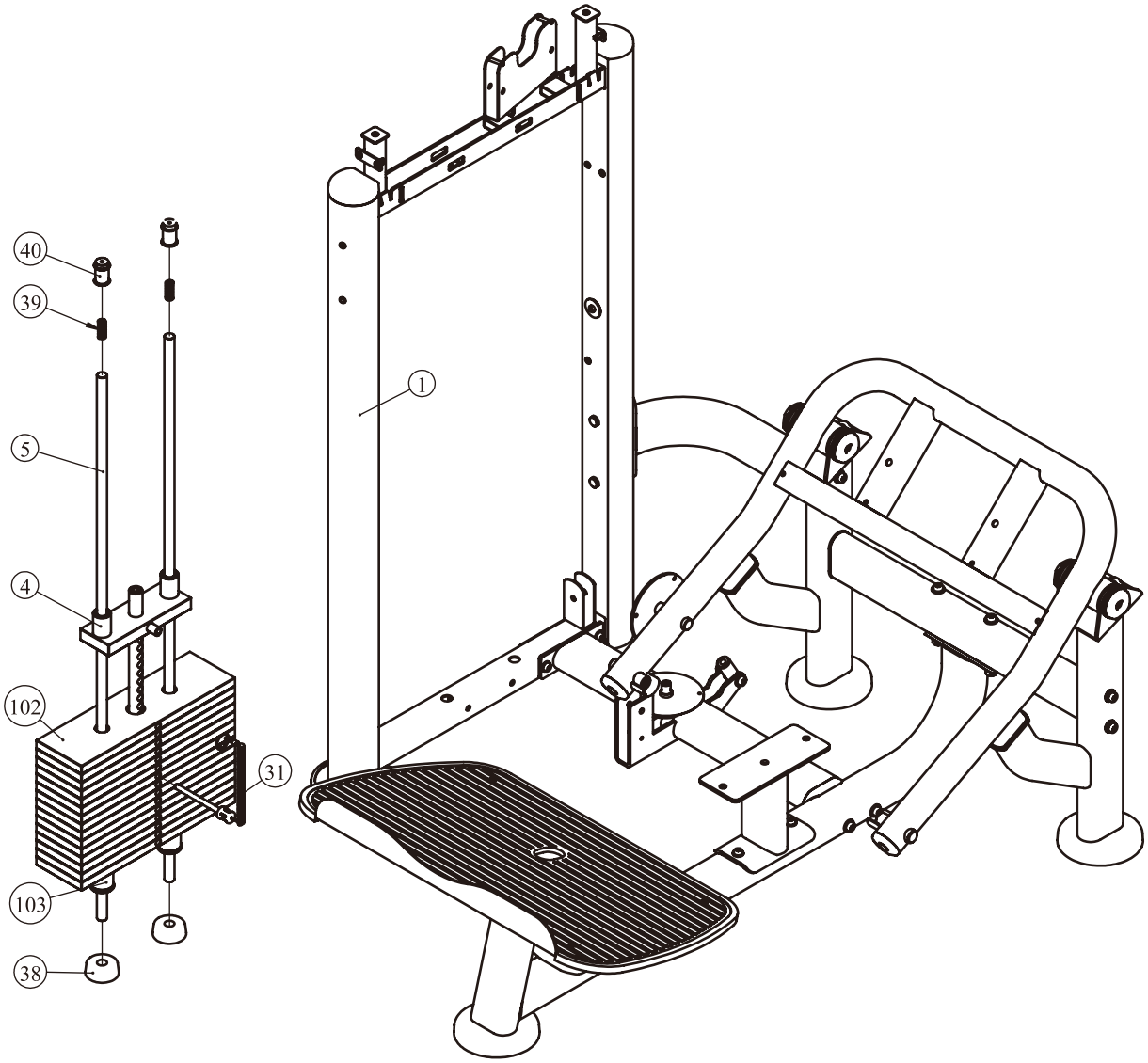

Assembly

Here is the assembly instruction for **295LBS Weights !**

STEP 5

Install the following parts onto the Weight Stack Frame (#1):

one Top Plate (#4)
two Guide Rod Φ19*1242 (#5)
one Selector Pin W/Coil (#31)
two Φ63.5*25.4 Rubber Pad (#38)
two Spring (#39)
two Φ25*Φ19*45 Guide Rod Fixing Sleeve (#40)
nineteen Weight Plate 15LBS (#102)

Grade No.	Part No.	Description	QTY
102	FE97193200	15LBS Weight Plate	19

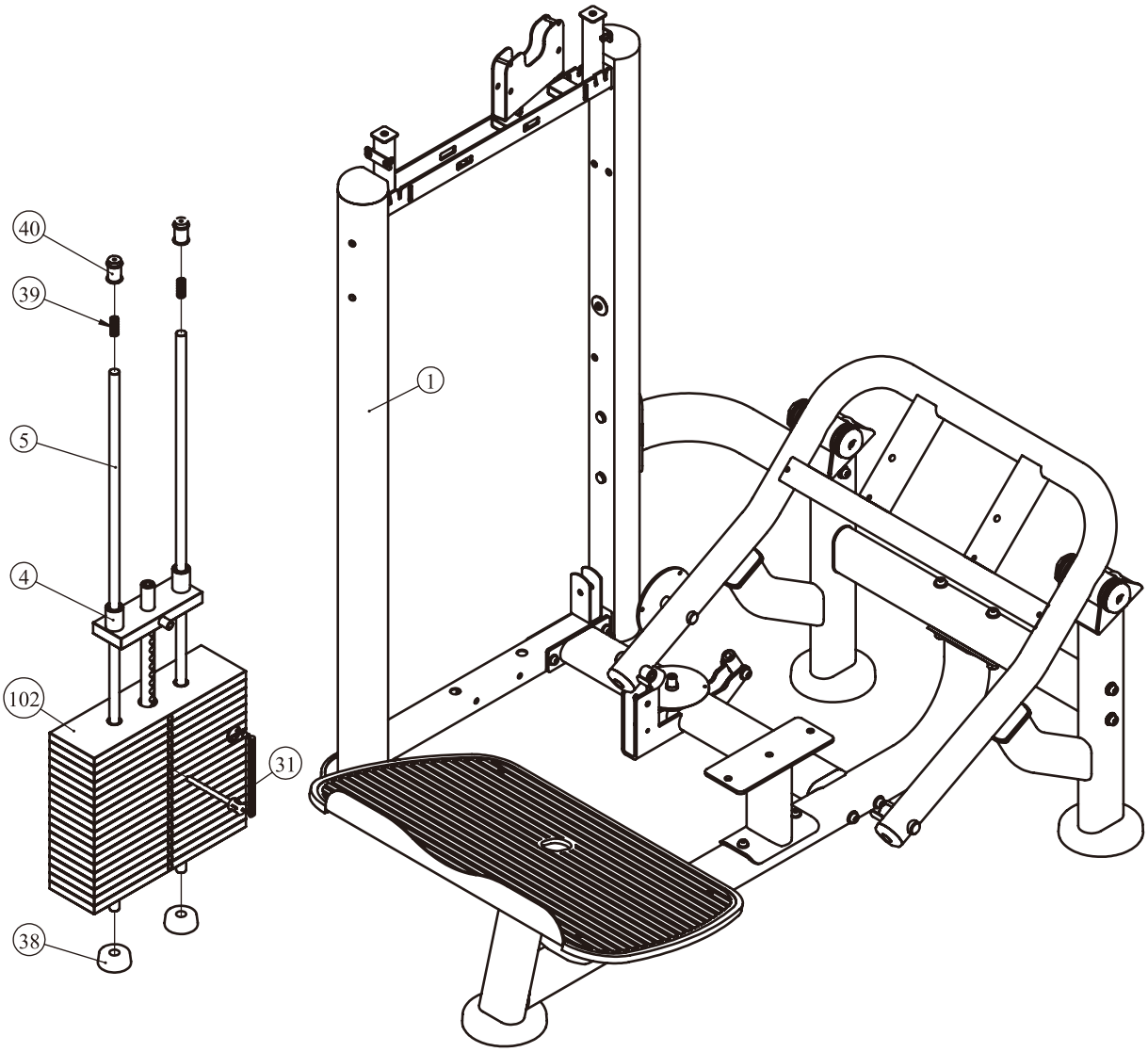

Assembly

All weight plate sticker paste schematic diagram

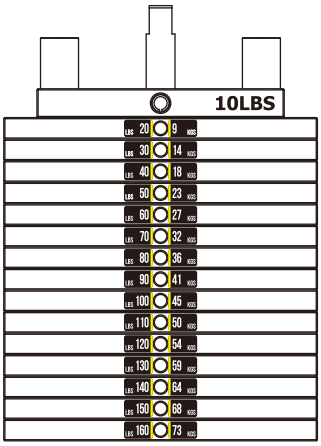

20-160LBS

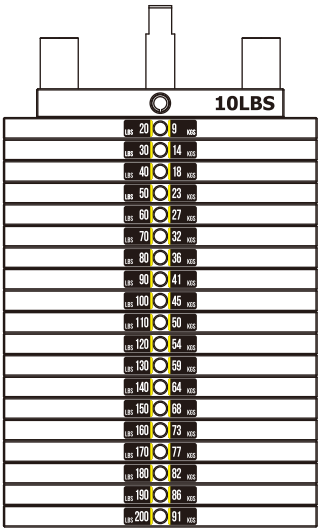

20-200LBS

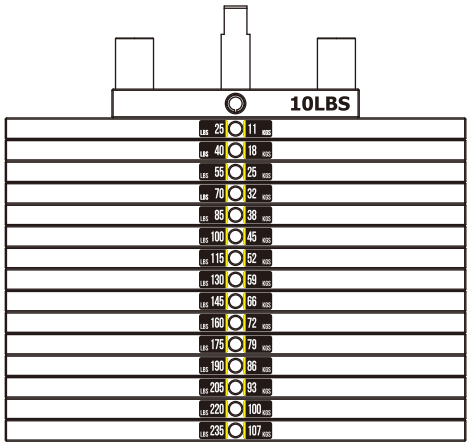

25-235LBS

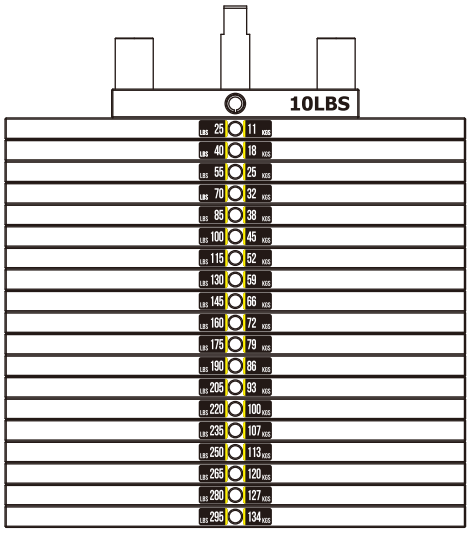

25-295LBS

Assembly

STEP 6 Full Shroud

1. Attach the Training Placard Cover (#7), Front Shroud (#64) and Right Front Shroud (#65) to Weight Stack Frame (#1), using:
   two M6*10 CRPHS (#43) two M6*16 CRPHS (#44)
   four M6*20 CRPHS (#45)
2. Attach the Top Rear Shroud (#8), Rear Shroud (#66) to Weight Stack Frame (#1), using:
   two M6*10 CRPHS (#43) two M6*16 CRPHS (#44)
   four M6*20 CRPHS (#45)
3. Attach the Top Cover (#6) to Weight Stack Frame (#1), using:
   two M6*20 CRPHS (#45) two Φ16.5*6.88 Spout Plug (#37)
4. Attach the Cup Holder (#9) to Weight Stack Frame (#1), using:
   two M6*20 CRPHS (#45)

Note: Wrench Tighten Bolts.

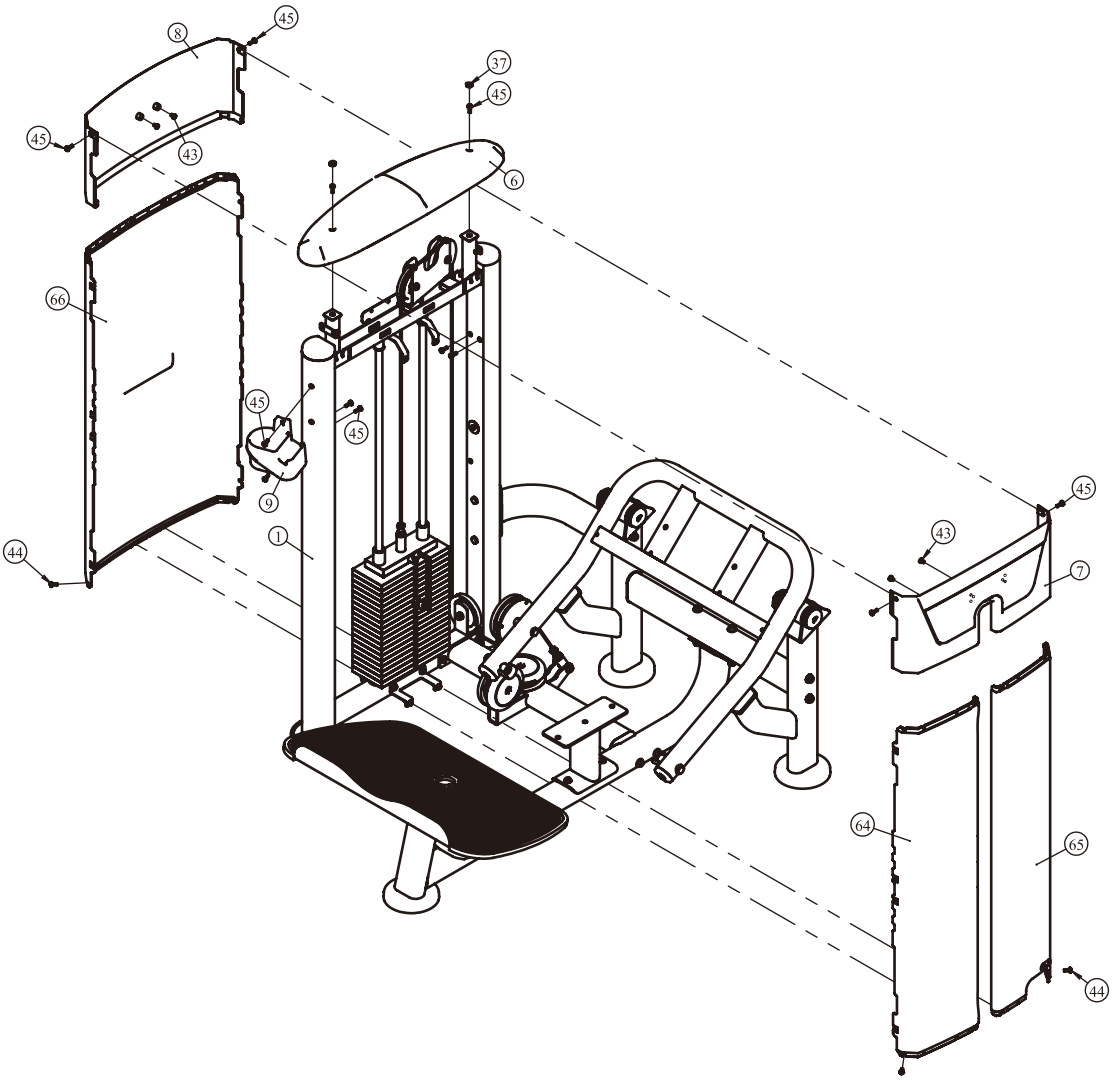

Assembly

STEP 7

1. Attach the Back Cushion (#67) to Rotating Frame ASSY (#15), using:
   two M10*75 SHCS (#51) two Φ11*Φ20*2 Flat Washer (#60)
2. Attach the Seat Cushion (#68) to Cushion Frame (#18), using:
   two M10*30 SHCS (#48) two Φ11*Φ20*2 Flat Washer (#60)
3. Attach the Adjustment Belt (#25) and Waist Belt (#26) to Rotating Frame ASSY (#15), using:
   two Spacer Sleeve Φ20*14 (#35) two M12*35 SHCS (#54)
   two Φ12 Spring Washer (#58) two Φ12.2*Φ30*3.5 Flat Washer (#74)

Note: Wrench Tighten Bolts.

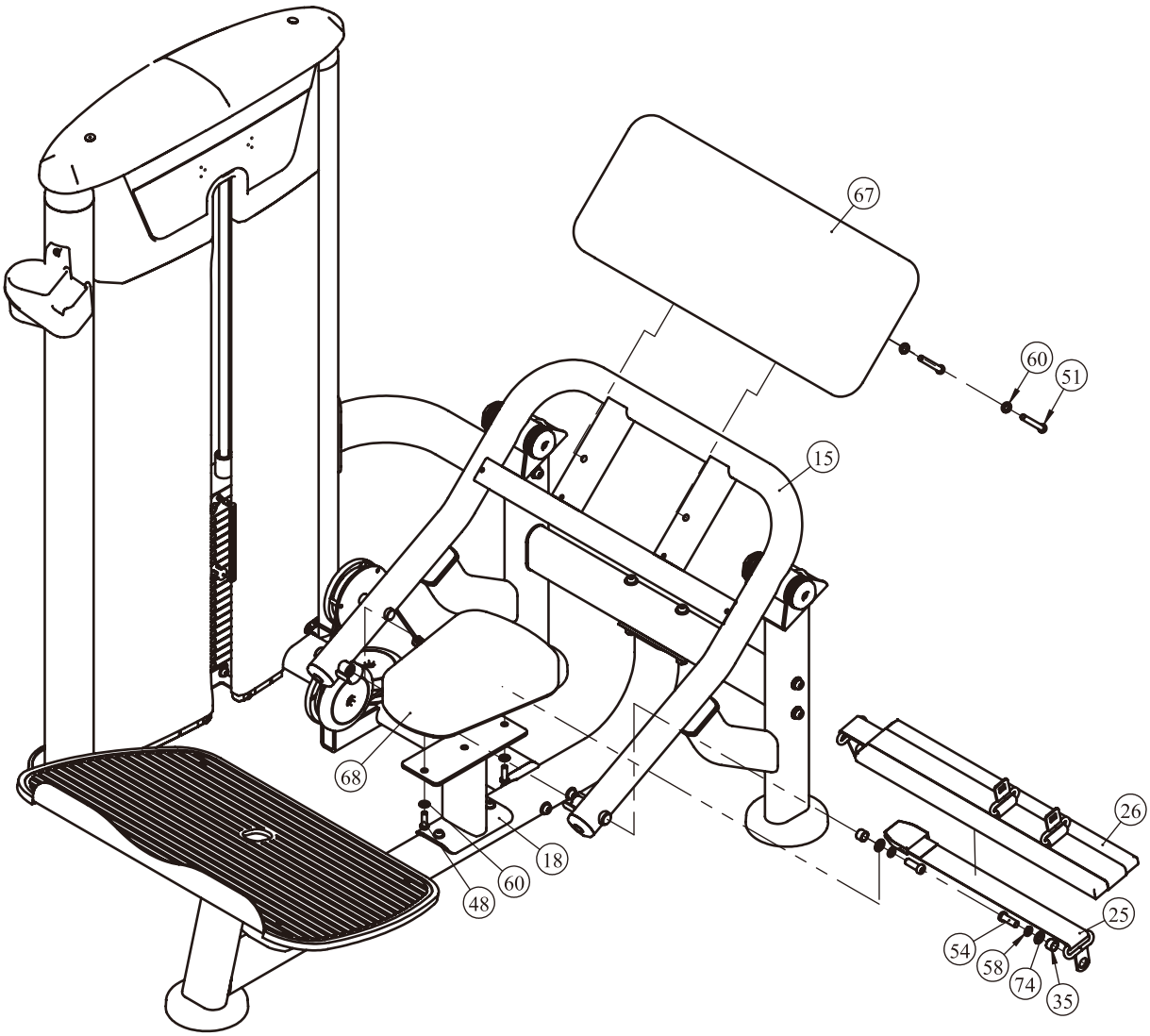

Adjust Instructions and Exercise Instructions

The use of Selector Pin W/Coil

1. Select an appropriate weight and put the Selector Pin W/Coil into the hole on it.
2. Make sure the Selector Pin W/Coil gets into the hole completely.

The Waist Belt adjustment

Sit on the seat cushion and adjust the waist belt to the appropriate length.

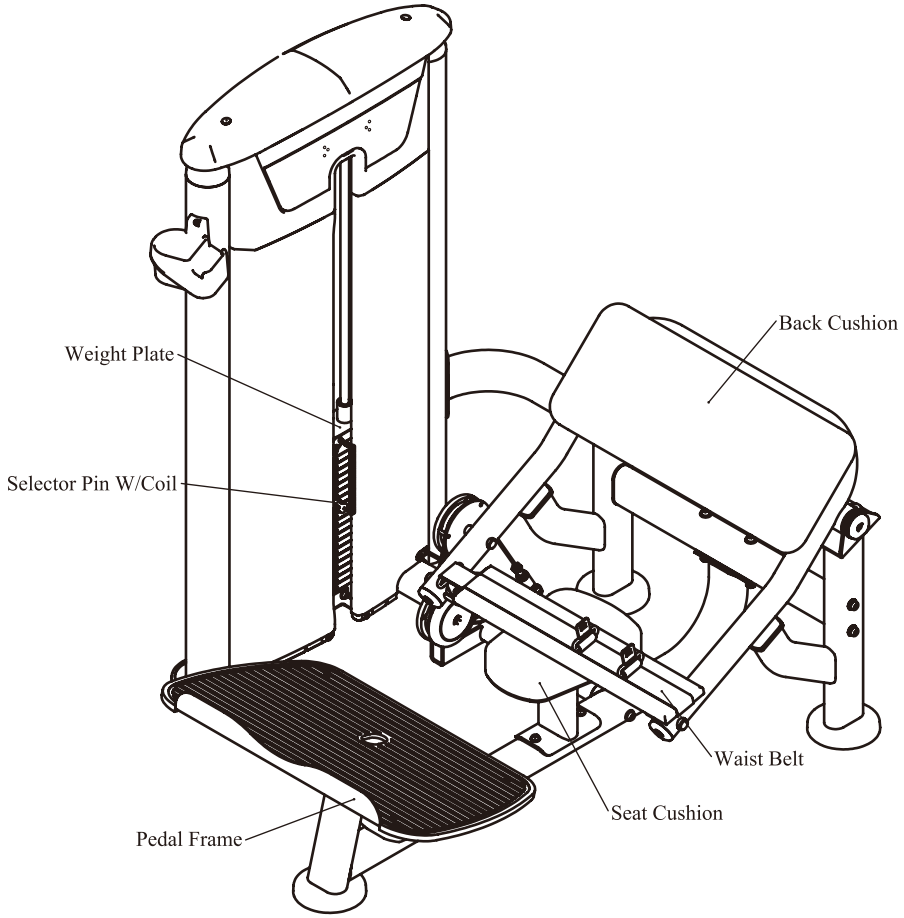

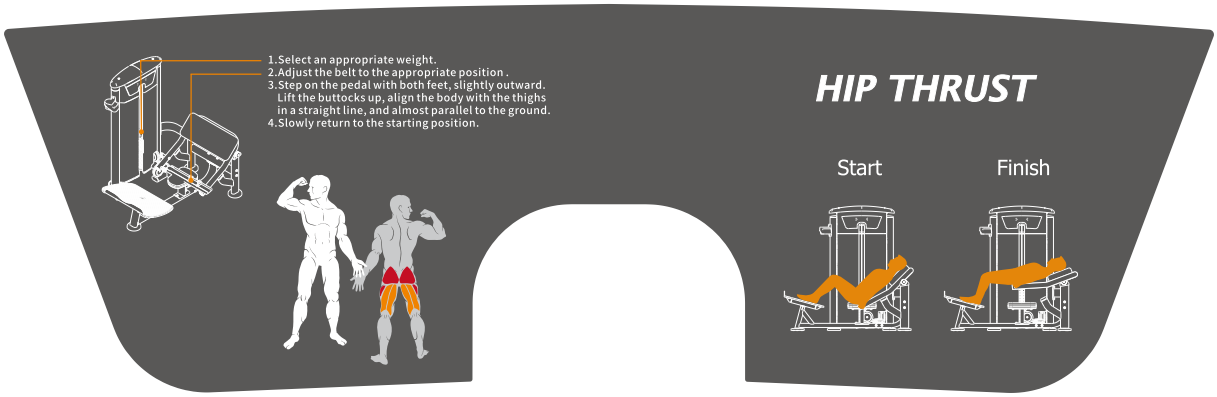

Maintenance Schedule

ROUTINE	COMMERCIAL MAINTENANCE	HOME MAINTENANCE	LATEST DATE ENTRY						
Inspect; Links, Pull Pins, Snap Locks, Swivels, Weight Stack Pins	DAILY	WEEKLY							
Clean; Upholstery	DAILY	WEEKLY							
Inspect; Cables or Belts and their tension	DAILY	WEEKLY							
Inspect; Accessory Bars, and Handles	WEEKLY	3 MONTHS							
Inspect; All Decals	WEEKLY	3 MONTHS							
Inspect; All Nuts and Bolts, Tighten if needed	WEEKLY	3 MONTHS							
Inspect; Anti-Skid Surface	WEEKLY	3 MONTHS							
Clean & Lubricate; Guide Rods with a Teflon (PTFE) based lubricant (Superlube)	MONTHLY	3 MONTHS							
Lubricate; Seat Sleeves, Turcite Bushings, Linear Bearing	MONTHLY	3 MONTHS							
Clean and Wax; All Glossy Finishes	6 MONTHS	YEARLY							
Repack with Grease; Linear Bearings	6 MONTHS	YEARLY							
Replace; Cables, Belts and Connecting Parts	YEARLY	3 YEARS							

Your equipment comes with a commercial maintenance decal. For personal, in home use, please follow the home maintenance schedule listed above.

General Maintenance Information

Links, Pull-Pins, Snap Hooks, Swivels, Weight Stack Pins:
* Check all pieces for signs of visible wear or damage.
* Check springs in snap hooks and pull-pins for proper tension and alignment.
* If the spring sticks or has lost its rigidity, replace it immediately.

Upholstery:
* To ensure prolonged upholstery life and proper hygiene, all upholstered pads should be wiped down with a damp cloth after every workout.
* Periodically take the time to use a mild soap or an approved vinyl upholstery cleaner to deter the onset of cracking or drying. Avoid using any abrasive cleaners or cleaners not intended for use on vinyl.
* Replace ripped or warn upholstery immediately.
* Keep sharp or pointed objects clear of all upholstery.

Decals:
* Inspect and familiarize yourself with any safety warnings or other user information posted on each decal.

Nuts and Bolts:
* Inspect all nuts and bolts for any loosening and tighten if needed.
* Go through a re-tightening sequence periodically to ensure that all hardware is tensioned proper.

Anti-Skid Surfaces:
* These surfaces are designed to supply secure footing and need to be replaced if they appear worn or become slippery.

Belts and Cables:
* We uses only high quality belt, and mil-spec cables.
* Visually inspect the belts and cables for fraying, cracking, peeling or discoloration.
* While the machine is not in use, carefully run your fingers along the belt or cable to feel for thinning or bulging areas.
* Replace belts and cables immediately at the first signs of damage or wear. Do not use equipment until belts or cables have been replaced.

Belt and Cable Tension:
* Referring to the Owners Manual, when belts or cables are used check all bolts attachments to be sure they are properly attached.
* Check slack in cables and re-adjust cable tension if needed.

Seat Sleeves, Guide Rods:
* Wipe down adjusting tubes with a dust free rag before applying lubricant.
* Lubricate seat sleeves and Guide Rods with a Silicon or Teflon based lubricant spray.

Linear Bearings:
* Referring to the Owners Manual carefully disassemble the bearing from its housing and place a finger full of light grease (lithium, super lube, etc.) into the inside of the bearing. Using your finger, press the grease into the ball-bearings and their tracks. repeat until the ball-bearing tracks are full of grease. Insert the shaft back into the bearing and wipe off excess grease.

PLEASE KEEP THIS FOR YOUR RECORDS

Weight Training Tips

Use this manual to guide you through the basic exercises you can perform on your equipment. To gain maximum results and avoid possible injury, consult a fitness professional to develop your complete exercise program.

Always consult your physician before starting any exercise program.

To be successful in your exercise program, it is important to develop an understanding of the basic principles of strength training. Now that you have your equipment, it is only natural that you want to get started immediately. First, determine a set of realistic goals and objectives for yourself. By deciding on an exercise plan that is right for you prior to starting, you will contribute significantly to your success.

Warm up properly before engaging in weight resistance training. Stretching, yoga, jogging, calisthenics or other cardiovascular exercise can help prepare your body for the heavier workload of lifting weights.

Learn how to perform the exercise correctly before using heavy weight. Correct form is important to avoid injury and to ensure that you work the proper muscle groups.

Know your limitations. If you are new to weight training or are embarking on an exercise regimen after a long layoff, start slowly and build foundational strength over a longer period of time.

Pay attention to your breathing. Exhale when you exert is a general rule of thumb. Never hold your breath.

SYSTEM CERTIFICATION ISO 9001 SGS
SYSTEM CERTIFICATION ISO 14001 SGS
SYSTEM CERTIFICATION OHSAS 18001 SGS
SYSTEM CERTIFICATION ISO 10015 SGS