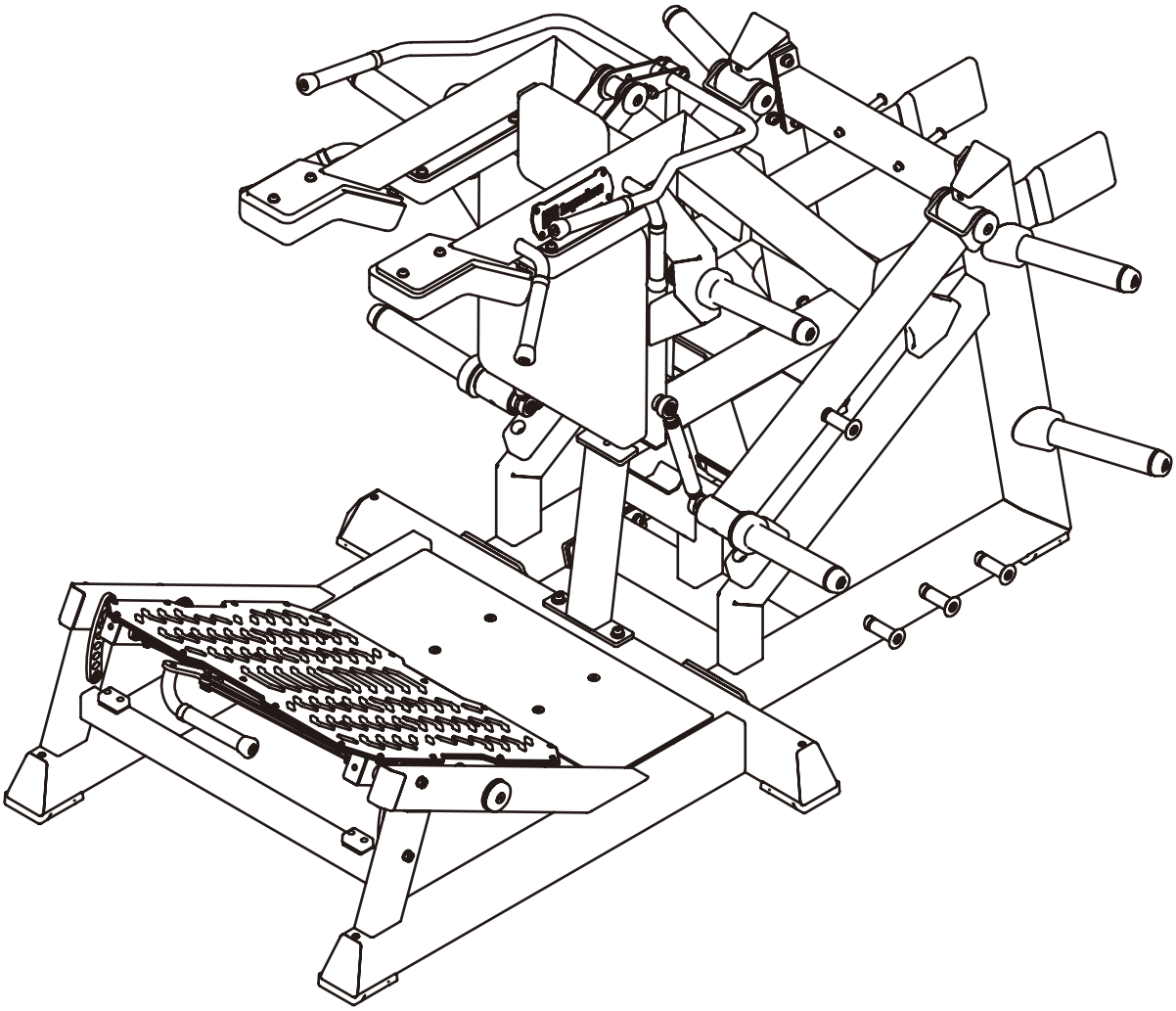

ECP713

POWER SQUAT

OWNER'S MANUAL

240

CAUTION! Read all precautions and instructions in this manual before using this equipment.

Table Of Contents

CAUTION!

Read all precautions and instructions in this manual before using this equipment.

Important Safety Instructions---------- 3

Instructions---------- 5

Exploded View and Parts List---------- 6

Measurement Guide---------- 20

Assembly Instructions---------- 21

Assembly---------- 22

Adjust Instructions and Exercise Instructions---------- 29

Maintenance Schedule---------- 30

General Maintenance Information---------- 31

Weight Training Tips---------- 32

Important Safety Instructions

Before beginning any fitness program, you should obtain a complete physical examination from your physician. When using exercise equipment, basic precautions should always be taken, including the following:

1. Read all instructions before using the equipment.
   These instructions are written to ensure your safety and to protect the unit.

2. Use the equipment only for its intended purpose as described in this guide.
   Do not use accessory attachments that are not recommended by the manufacturer: such attachments might cause injuries.

3. The product should only be used on a level surface and is with 0.5 meters space around the product.
   Do not use the equipment outdoors.

4. Do not allow children on or near the equipment. And children are not allowed to use this equipment.
   Teenagers should use this equipment with adult supervision.

5. Do not overexert yourself or work to exhaustion.
   Do not attempt to lift more weight than you can control safely.
   If you feel any pain or abnormal symptoms, stop your workout immediately and consult your physician.

6. This equipment is not used as medical apparatus and instruments.

7. Never operate the unit when it has been dropped or damaged.
   Never drop or insert anything into any opening in the equipment.
   Always check the unit and its cables before each use. Make sure that all fasteners and cables are secure and in good working condition.
   Frayed or worn cables can be dangerous and may cause injury. Periodically check these cables for any indication of wear.
   Keep hands, limbs, loose clothing and long hair well out of the way of moving parts.

8. Be careful when getting on or off the equipment.

9. Wear proper exercise clothing and shoes for your workout, no loose clothing.

Important Safety Instructions

Personal Safety During Assembly

Read each step in the assembly instructions and follow the steps in sequence. Do not skip ahead. If you skip ahead, you may learn later that you have to disassemble components and that you may have damaged the equipment.

Assemble and operate the equipment on a solid, level surface. Locate the unit a few feet from walls or furniture to provide easy access. The equipment is designed for your enjoyment. By following these precautions and using common sense, you will have many safe and pleasurable hours of healthful exercise with the equipment.

Training Area and Free Area

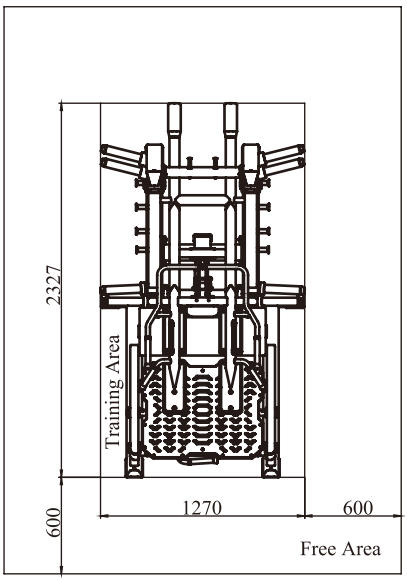

Specifications

Class: S

Maximum Wt. Capacity: 100*2kg/ 220*2lbs

Maximum User Weight: 150kg/ 330lbs

Product Dimension: 2327*1270*1432mm

Product Total Surface: 2327*1270mm

Product Total Mass:

Instructions

Before beginning assembly please take the time to read instructions thoroughly. Please use the various lists in this manual to make sure that all parts have been included in your shipment. When ordering, use part number and description from the lists. Use only our replacement part when servicing. Failure to do so will void your warranty and could result in personal injury.

The equipment is designed to provide the smoothest, most effective exercise motion possible. After assembly, you should check all functions to ensure correct operation. If you experience problems, first recheck the assembly instructions to locate any possible errors made during assembly. If you are unable to correct the problem, call your authorized dealer. Be sure to have your serial number and this manual when calling. When all parts have been accounted for, continue on.

Tools Required

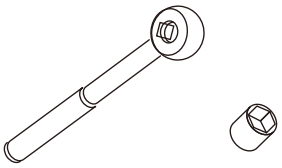

Ratchet Wrench and Socket

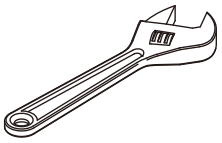

Adjustable Wrench

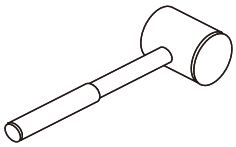

Rubber Mallet

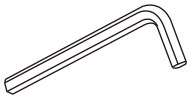

Hex Key Wrench Set

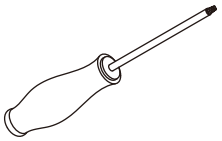

Phillips Screwdriver

Exploded View and Parts List

Overall

Item No.	Part No.	Description	QTY
1	ECP71301ASSY	Side Frame ASSY I	1
2	ECP71302ASSY	Side Frame ASSY II	1
3	ECP7130900	Rear Connecting Frame	1
4	ECP71310ASSY	Barbell Frame ASSY	2
5	ECP71312ASSY	Pulling Rod Frame ASSY	1
6	ECP20118ASSY	Barbell Storage Frame ASSY	4
7	ECP20121ASSY	Set-Contained Bearing	2
8	ECP1012100	Balance Iron	2
9	ECP71304ASSY	Front Floor Frame ASSY	1
10	ECP71307ASSY	Adjusting Handle Frame ASSY	1
11	ECP71303ASSY	Back Pad Frame ASSY	1
12	ECP71306ASSY	Limit Adjusting Frame ASSY	1
13	ECP7130800	Limit Frame	1
14	ECP71311ASSY	Short Connecting Rod ASSY	2
15	ECP71313ASSY	Swing Frame ASSY I	1
16	ECP71314ASSY	Swing Frame ASSY II	1
17	ECP7132100	Fixing Shaft I Φ25*79	1
18	ECP7132200	Fixing Shaft II Φ25*134	1
19	ECP1012200	LOGO Plate	2
20	ECP1012300	LOGO Inner Plate	2
21	ECP1011600	Fixing Shaft Φ25*109	2
22	QD18-304-10	Gas Spring	1
23	ECP7135100	Back Pad	1
24	ECP7135200	Head Pad	1
25	ECP7135300	Shoulder Pad I	2
26	ECP7135400	Shoulder Pad II	2

Exploded View and Parts List

Overall

Item No.	Part No.	Description	QTY
27	ECP1012500	Elastic Band Hanging Pillar	2
28	PNLM5*10DHS20	Button Head Cap Screw M5*10	8
29	IE950716500	Aluminum CapΦ60	8
30	SL70011700	Aluminum CapΦ54	2
31	GB70M8*20DN20	Socket Head Cap Screw M8*20	4
32	GB70BTM10*25DN18	Socket Head Cap Screw M10*25	16
33	PNLM8*25DN20	Button Head Cap Screw M8*25	4
34	GB70BTM12*30DN18	Socket Head Cap Screw M12*30	18
35	GB70BTM12*70DN18	Socket Head Cap Screw M12*70	2
36	GB70BTM10*75DN18	Socket Head Cap Screw M10*75	6
37	GB70BTM10*100DN18	Socket Head Cap Screw M10*100	5
38	CNLM10*30*30DS20NL	Flat Head Cap Screw M10*30	8
39	CNLM12*30DS20NL	Flat Head Cap Screw M12*30	2
40	GB938N19	Spring Washer Φ8	10
41	GB9312N19	Spring Washer Φ12	18
42	GB958DN2	Flat Washer Φ9*Φ16*1.6	6
43	GB9510DN2	Flat Washer Φ11*Φ20*2	28
44	DQ8DN2	Flat Washer Φ9*Φ22*1.6	4
45	GB9512DN2	Flat Washer Φ13*Φ24*2.5	22
46	NM8DN2	Nylon Lock Nut M8	2
47	NM10DN2	Nylon Lock Nut M10	5
48	GB70M8*65DN20	Socket Head Cap Screw M8*65	2
49	NM12DN2	Nylon Lock Nut M12	2
50	NBS8DHS	Hex Key S=8	1
51	NBS6DHS	Hex Key S=6	1
52	NBS5DHS	Hex Key S=5	1
53	NBS3DHS	Hex Key S=3	1

Exploded View and Parts List

Overall

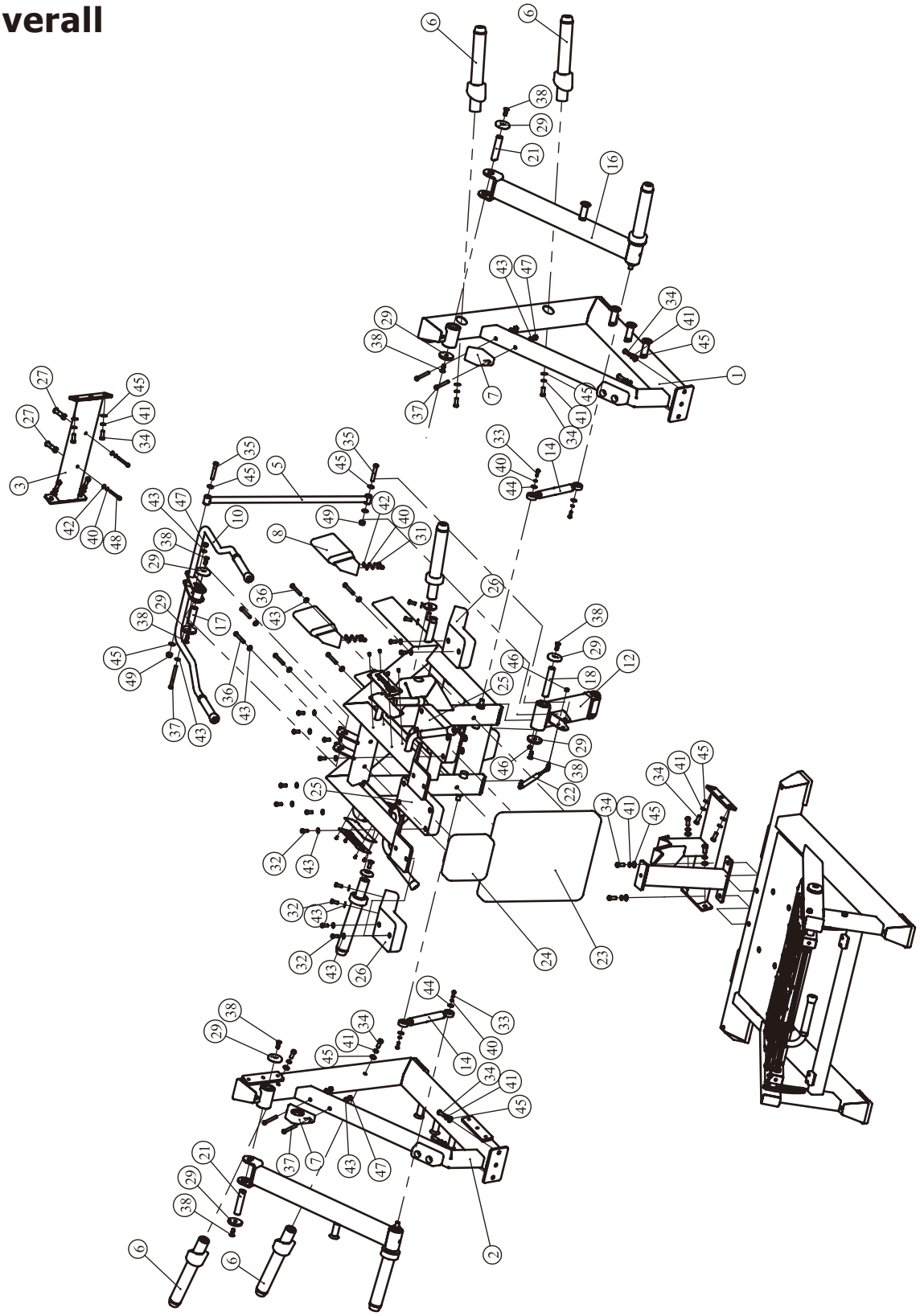

Exploded View and Parts List

Side Frame ASSY I

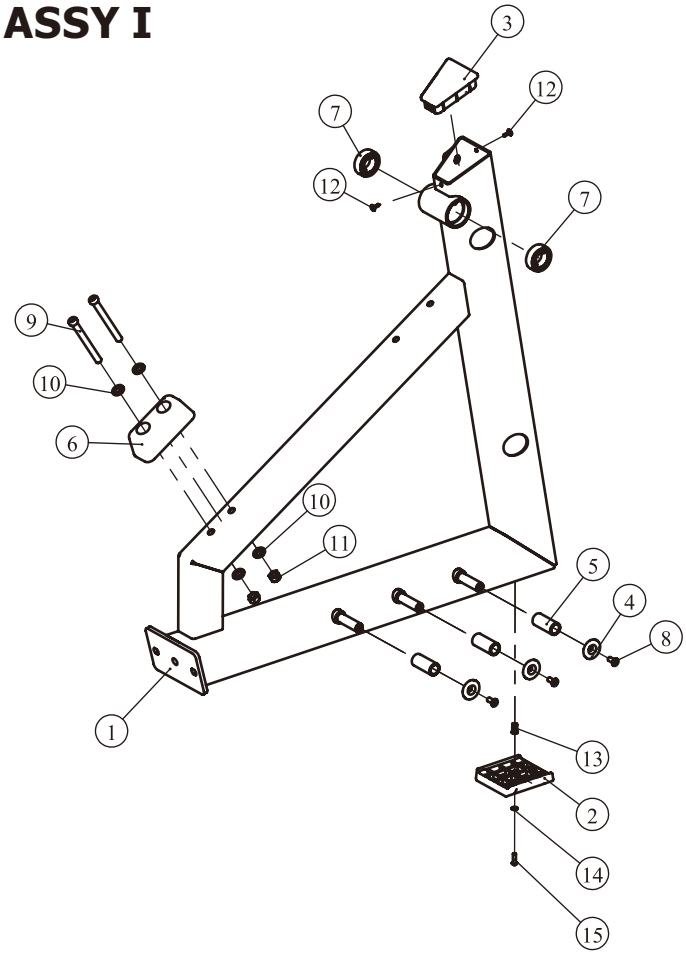

Grade No.	Part No.	Description	QTY
1.1	ECP7130100	Frame I	1
1.2	ECP2013400	Floor Mat	1
1.3	ECP2013500	Slanted Pipe Plug	1
1.4	ECP1012400	Aluminum CapΦ40	3
1.5	ECP1013000	Rotating Sleeve	3
1.6	PL380800	Safety Bumper	1
1.7	GB2766205-2ZC3	Bearing6205-2ZC3	2
1.8	CNLM8*20DS20NL	Flat Head Cap Screw M8*20	3
1.9	GB70BTM12*120DN18	Socket Head Cap Screw M12*120	2
1.10	GB9512DN2	Flat Washer Φ13*Φ24*2.5	4
1.11	NM12DN2	Nylon Lock Nut M12	2
1.12	GB9074ST4.2*22DHS	Cross Recessed Pan Head Thread Forming Screws ST4.2*22	2
1.13	GB17880.5M6*16.5DS17	Hexagon Rivet Nuts With Flat HeadM6*16.5	1
1.14	GB956DHS2	Flat Washer Φ6.6*Φ12*1.6	1
1.15	PNLM6*20DHS20NL	Button Head Cap Screw M6*20	1

Exploded View and Parts List

Side Frame ASSY II

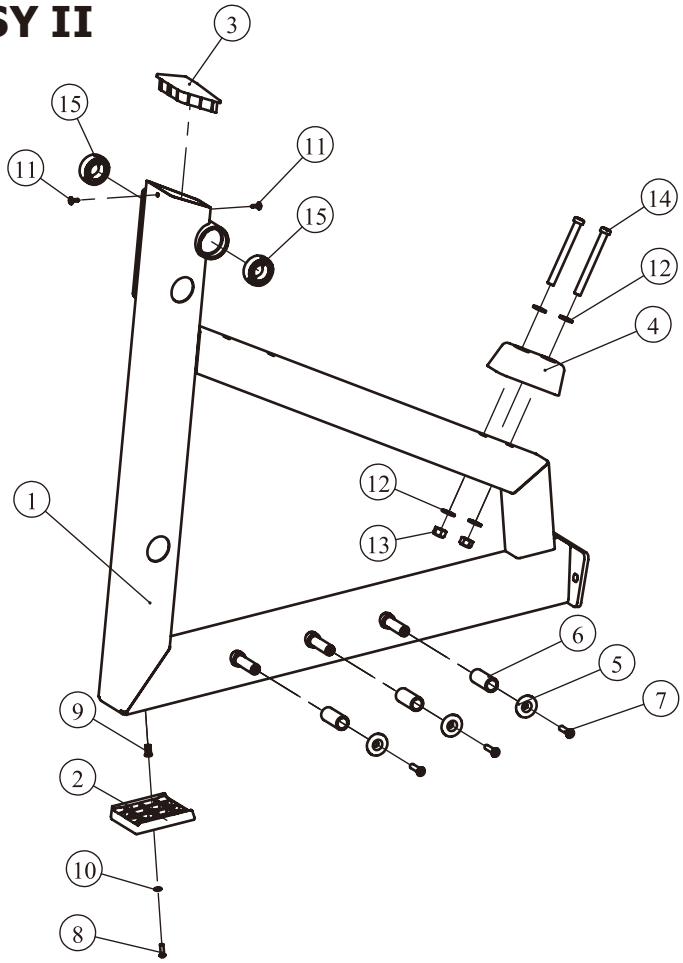

Grade No.	Part No.	Description	QTY
2.1	ECP7130200	Frame Ⅱ	1
2.2	ECP2013400	Floor Mat	1
2.3	ECP2013500	Slanted Pipe Plug	1
2.4	PL380800	Safety Bumper	1
2.5	ECP1012400	Aluminum CapΦ40	3
2.6	ECP1013000	Rotating Sleeve	3
2.7	CNLM8*20DS20NL	Flat Head Cap Screw M8*20	3
2.8	PNLM6*20DHS20NL	Button Head Cap Screw M6*20	1
2.9	GB17880.5M6*16.5DS17	Hexagon Rivet Nuts With Flat HeadM6*16.5	1
2.10	GB956DHS2	Flat Washer Φ6.6*Φ12*1.6	1
2.11	GB9074ST4.2*22DHS	Cross Recessed Pan Head Thread Forming Screws ST4.2*22	2
2.12	GB9512DN2	Flat Washer Φ13*Φ24*2.5	4
2.13	NM12DN2	Nylon Lock Nut M12	2
2.14	GB70BTM12*120DN18	Socket Head Cap Screw M12*120	2
2.15	GB2766205-2ZC3	Bearing6205-2ZC3	2

Exploded View and Parts List

Barbell Frame ASSY

Pulling Rod Frame ASSY

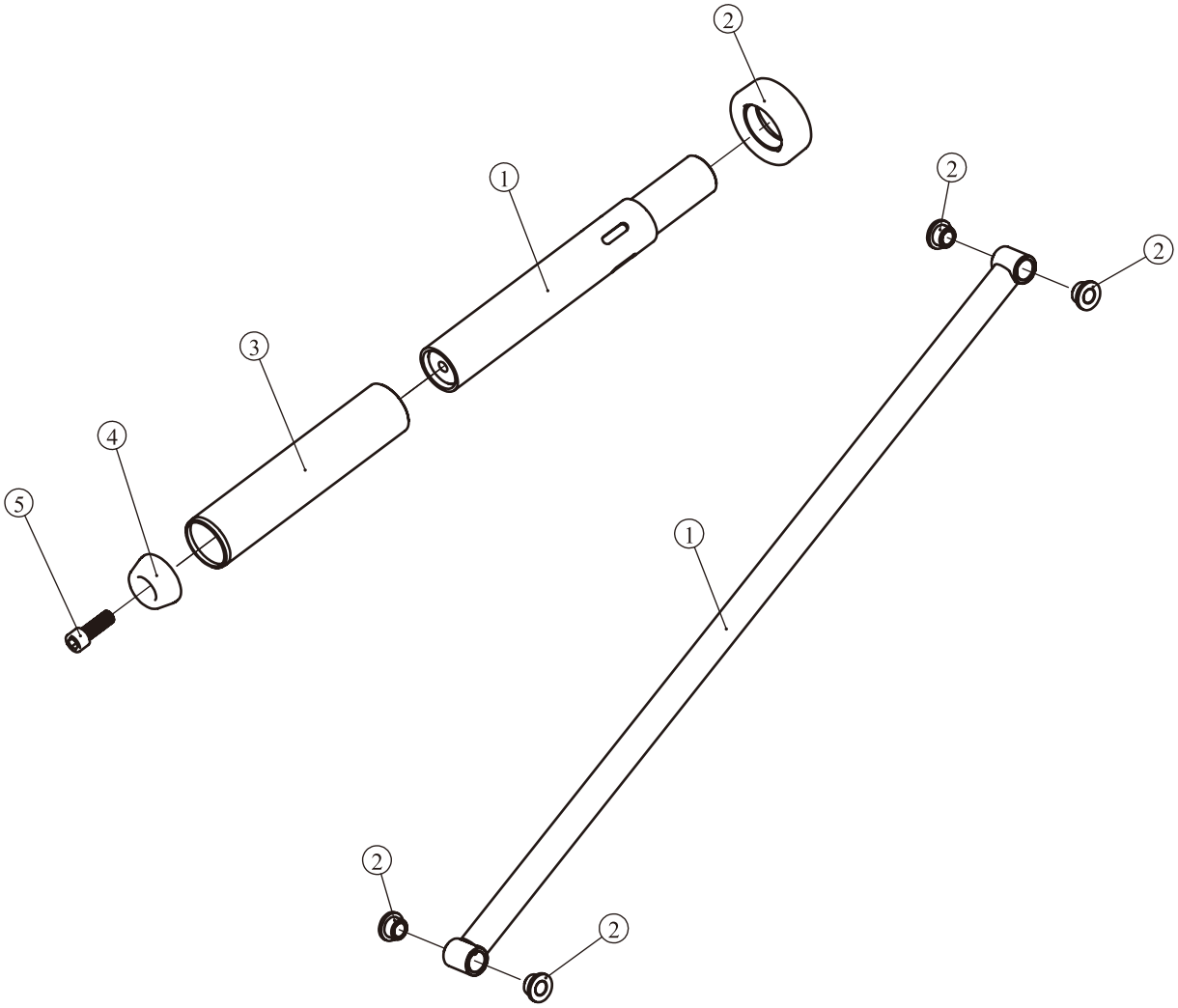

Grade No.	Part No.	Description	QTY
4.1	ECP7131000	Barbell Frame	1
4.2	PL1301600	Rubber Bumper	1
4.3	HZ70022000V1	Short Barbell Casing	1
4.4	SL70012000	Plastic Cap	1
4.5	GB70M12*35*35DHS20NL	Socket Head Cap Screw M12*35	1

Grade No.	Part No.	Description	QTY
5.1	ECP7131200	Pulling Rod Frame	1
5.2	M01402000	Bbushing	4

Exploded View and Parts List

Barbell Storage Frame ASSY

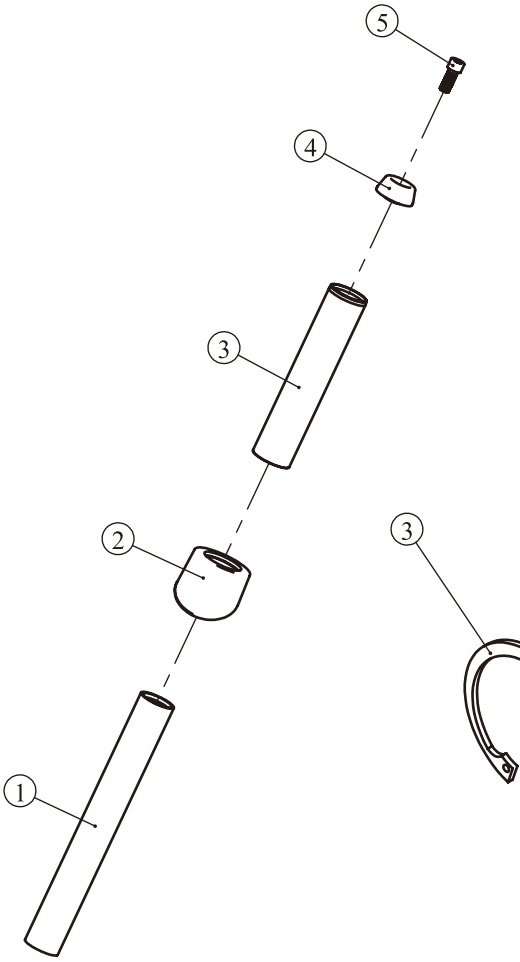

Grade No.	Part No.	Description	QTY
6.1	ECP2011800	Barbell Storage Frame	1
6.2	ECP2013800	Slanted Rubber Bumper	1
6.3	HZ70022000V1	Short Barbell Casing	1
6.4	SL70012000	Plastic Cap	1
6.5	GB70M12*30DHS20NL	Socket Head Cap Screw M12*30	1

Set-Contained Bearing

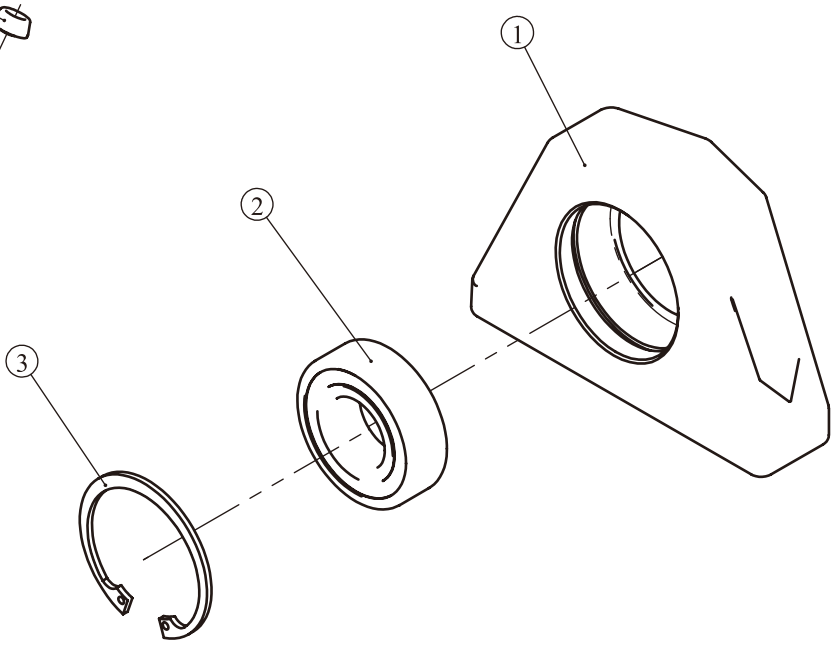

Grade No.	Part No.	Description	QTY
7.1	ECP2012100	Bearing Seat	1
7.2	GB2766205-2ZC3	Bearing6205-2ZC3	1
7.3	GB893.152FH12	Hole Retaining RingΦ52	1

Exploded View and Parts List

Front Floor Frame ASSY

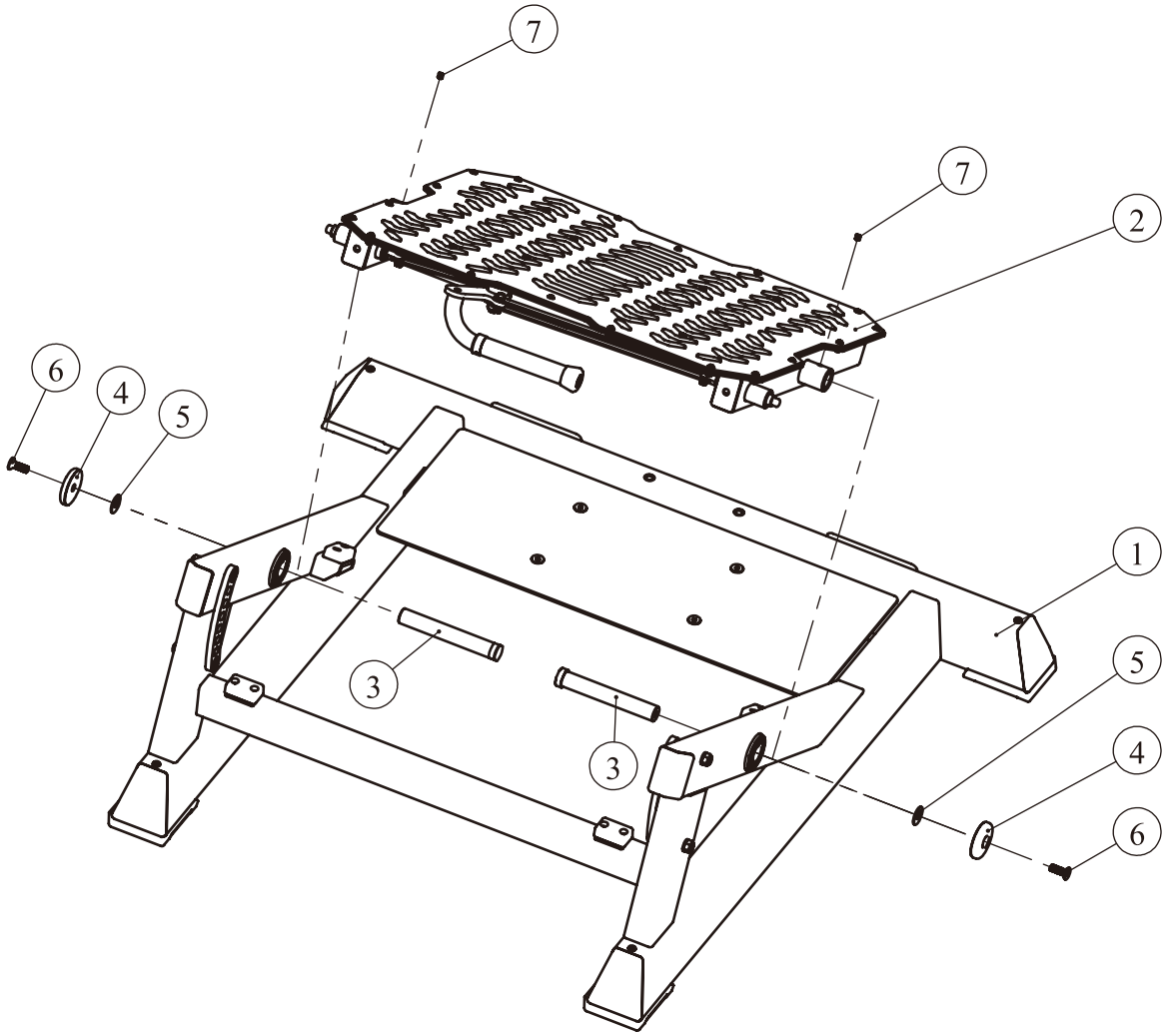

Grade No.	Part No.	Description	QTY
9.1	ECP7130400ASSY	Front Floor Frame Pre-ASSY	1
9.2	ECP71305ASSY	Pedal Frame Level 2 ASSY	1
9.3	ECP6174100	Rotating Shaft Ⅳ Φ30*173	2
9.4	IE950716500	Aluminum CapΦ60	2
9.5	DQ10DN2C	Flat Washer Φ11*Φ30*2	2
9.6	CNLM10*30*30DS20NL	Flat Head Cap Screw M10*30	2
9.7	GB77M8*8DHS2	Socket Set Screw M8*8	2

Exploded View and Parts List

Front Floor Frame Pre-ASSY

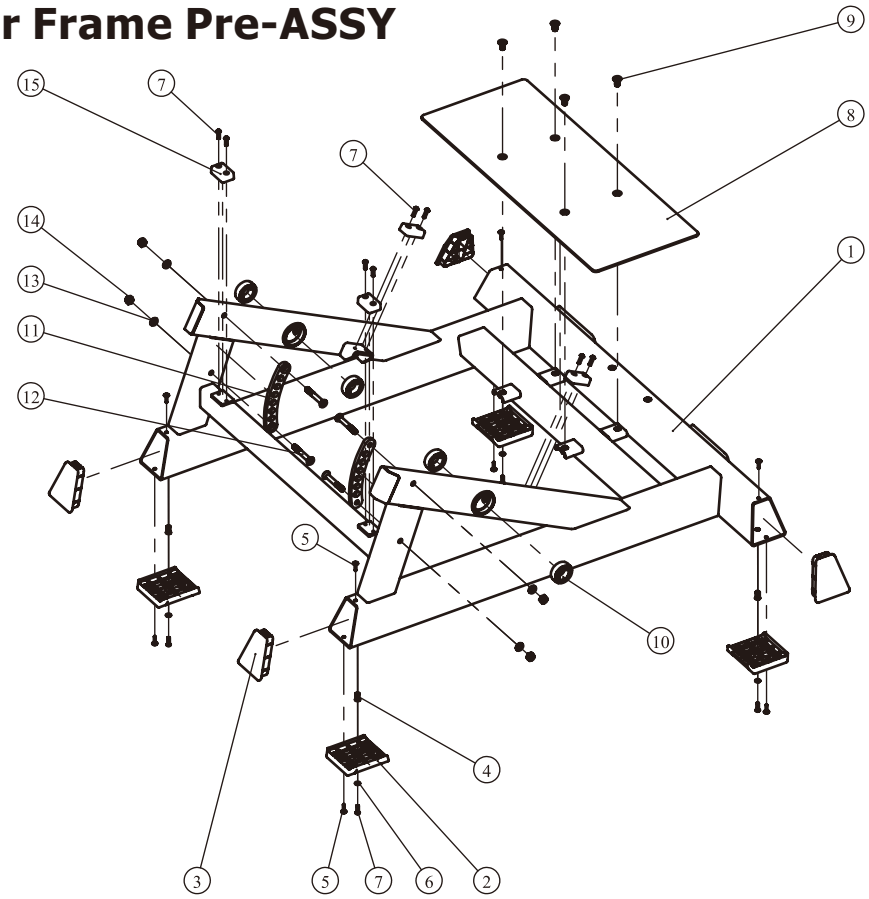

Grade No.	Part No.	Description	QTY
9.1.1	ECP7130400	Front Floor Frame	1
9.1.2	ECP2013400	Floor Mat	4
9.1.3	ECP2013500	Slanted Pipe Plug	4
9.1.4	GB17880.5M6*16.5DS17	Hexagon Rivet Nuts With Flat HeadM6*16.5	4
9.1.5	GB9074ST4.2*22DHS	Cross Recessed Pan Head Thread Forming Screws ST4.2*22	8
9.1.6	GB956DHS2	Flat Washer Φ6.6*Φ12*1.6	4
9.1.7	PNLM6*20DHS20NL	Button Head Cap Screw M6*20	12
9.1.8	ECP7132300	Small Foot Support Plate	1
9.1.9	CNLM10*20DHS20NL	Flat Head Cap Screw M10*20	4
9.1.10	GB2766205-2ZC3	Bearing6205-2ZC3	4
9.1.11	BB-SQ2600	Adjusting Plate	2
9.1.12	CNLM10*75DN20	Flat Head Cap Screw M10*75	4
9.1.13	GB9510DN2	Flat Washer Φ11*Φ20*2	4
9.1.14	NM10DN2	Nylon Lock Nut M12	4
9.1.15	CG500010700	Rubber Mat	4

Exploded View and Parts List

Pedal Frame Level 2 ASSY

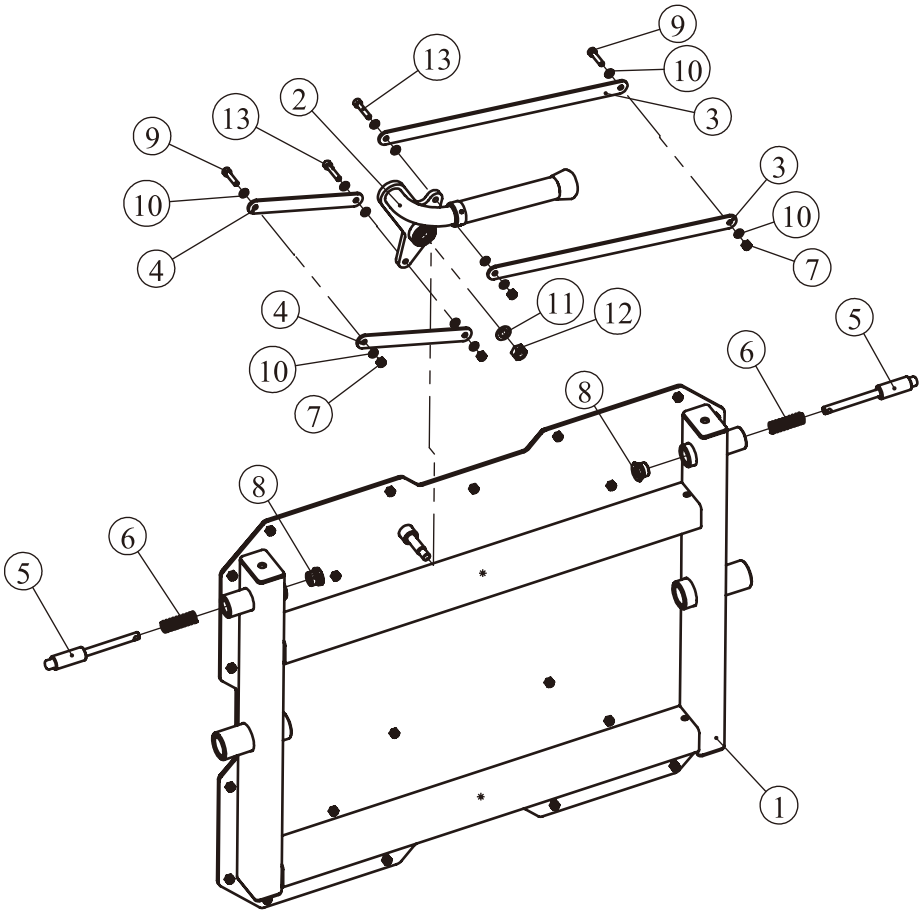

Grade No.	Part No.	Description	QTY
9.2.1	ECP7130500ASSY	Pedal Frame Level 1 ASSY	1
9.2.2	ECP71315ASSY	Turn The Handle Hrame ASSY	1
9.2.3	ECP7132500	Long Pull Plate	2
9.2.4	ECP7132600	Short Pull Plate	2
9.2.5	BB-SQ2700	Plug Pin Shaft	2
9.2.6	F2011600	Spring	2
9.2.7	NM6DS2	Nylon Lock Nut M6	4
9.2.8	BNH05163Q	Lock Nut	2
9.2.9	GB70M6*25*25DS4	Socket Head Cap Screw M6*25	2
9.2.10	GB956DS2	Flat Washer Φ6.6*Φ12*1.6	12
9.2.11	GB9510DN2	Flat Washer Φ11*Φ20*2	1
9.2.12	NM10DN2	Nylon Lock Nut M10	1
9.2.13	GB70M6*30DS4	Socket Head Cap Screw M6*30	2

Exploded View and Parts List

Pedal Frame Level 1 ASSY

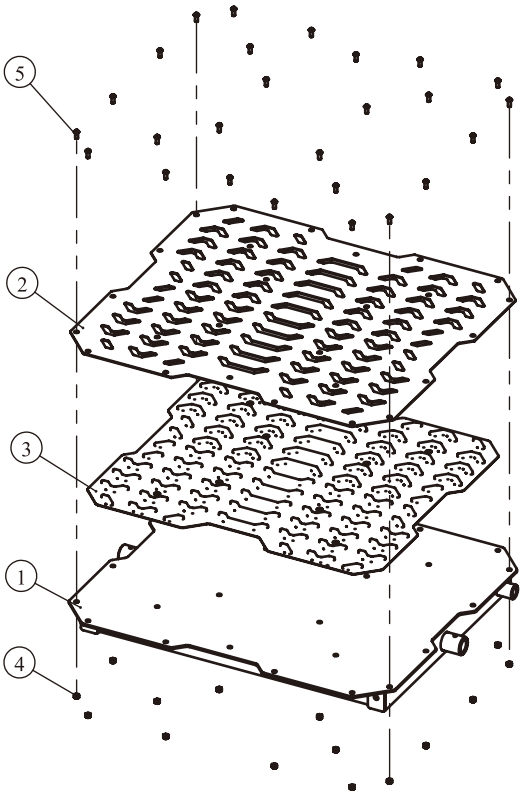

Adjusting Handle Frame ASSY

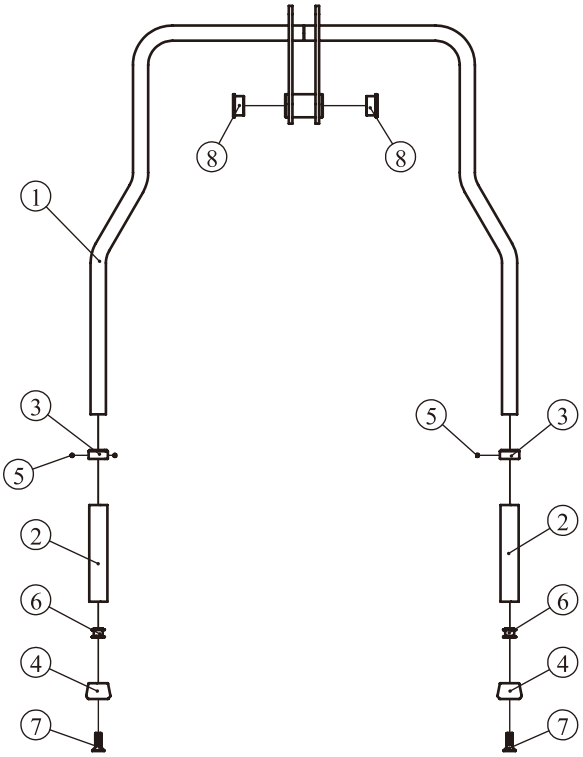

Grade No.	Part No.	Description	QTY
9.2.1.1	ECP7130500	Pedal Frame Level 1	1
9.2.1.2	ECP7132400	Big Foot Pedal	1
9.2.1.3	ECP7133100	Big Rubber foot pedal	1
9.2.1.4	NM6DS2	Nylon Lock Nut M6	26
9.2.1.5	PNLM6*15N19	Button Head Cap Screw M6*15	26

Grade No.	Part No.	Description	QTY
10.1	ECP7130700	Adjust Handle Frame	1
10.2	026-01PL0206-14	Glove	2
10.3	VST600-PL232600V1	Aluminum Retaining Ring	2
10.4	ECP6174500V1	Aluminum Cap	2
10.5	YZGB7710-32*3.2N19	Socket Set Screw 10-32*3.2	4
10.6	IF81165000	Lock Nut Φ25*2.5*21.6*M10	2
10.7	CNLM10*30*30DS20NL	Flat Head Cap Screw M10*30	2
10.8	CG3000P17000	Copper bearing	2

Exploded View and Parts List

Back Pad Frame ASSY

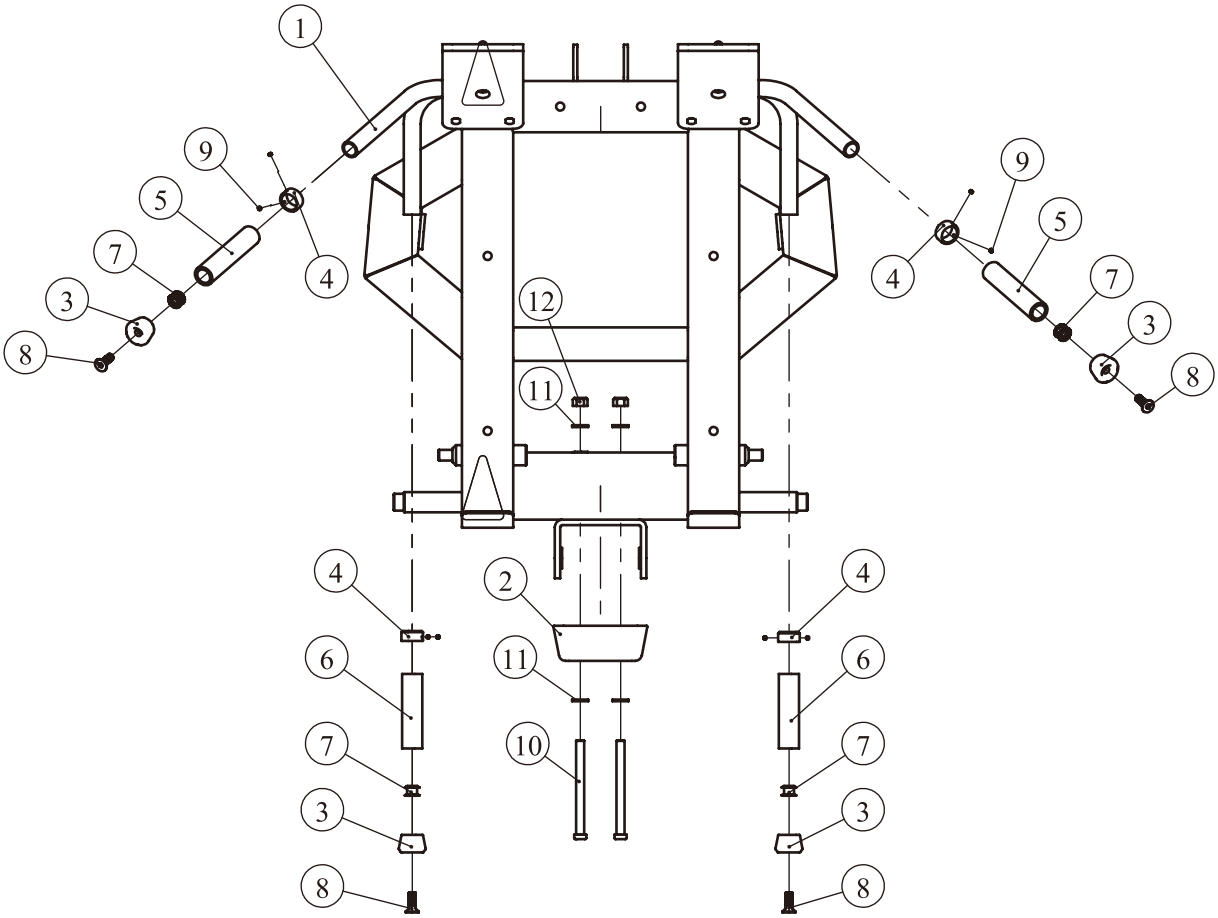

Grade No.	Part No.	Description	QTY
11.1	ECP7130300	Back Pad Frame	1
11.2	PL380800	Safety Bumper	1
11.3	ECP6174500	Aluminum Cap	4
11.4	VST600-PL232600V1	Aluminum Retaining Ring	4
11.5	FE97031800	Glove	2
11.6	026-01PL0206-5	Glove	2
11.7	IF81165000	Lock Nut Φ25*2.5*21.6*M10	4
11.8	CNLM10*30*30DS20NL	Flat Head Cap Screw M10*30	4
11.9	YZGB7710-32*3.2N19	Socket Set Screw 10-32*3.2	8
11.1	GB70BTM12*140DN18	Socket Head Cap Screw M12*140	2
11.11	GB9512DN2	Flat Washer Φ13*Φ24*2.5	4
11.12	NM12DN2	Nylon Lock Nut M12	2

Exploded View and Parts List

Limit Adjusting Frame ASSY

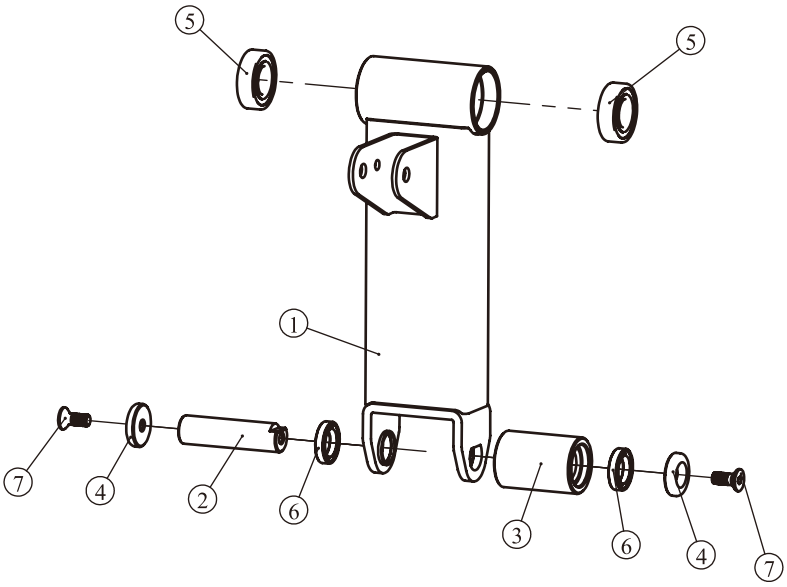

Grade No.	Part No.	Description	QTY
12.1	ECP7130600	Limit Adjusting Frame	1
12.2	ECP7132700	Limit Rotating Shaft Φ29*95	1
12.3	BB-SQ3100V1	Limit Sleeve	1
12.4	IN-D21202000	CapΦ38	2
12.5	GB2766205-2ZC3	Bearing6205-2ZC3	2
12.6	GB27661805-2ZC3NBK	Bearing61805-2ZC3NBK	2
12.7	CNLM10*25DS20NL	Button Head Cap Screw M10*25	2

Short Connecting Rod ASSY

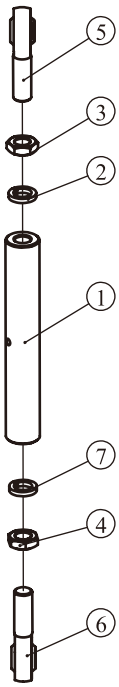

Grade No.	Part No.	Description	QTY
14.1	ECP7131100	Short Rod	1
14.2	GB9316DS12	Spring Washer Φ16	1
14.3	GB6172.1M16DS2	Left Hex Nut M16	1
14.4	GB6172.1LM16DS2	Hex Nut M16	1
14.5	SA16	Oscillating Bearing	1
14.6	SAL16	Left Oscillating Bearing	1
14.7	GB93L16DS12	Spring Washer Φ16	1

Exploded View and Parts List

Swing Frame ASSY I

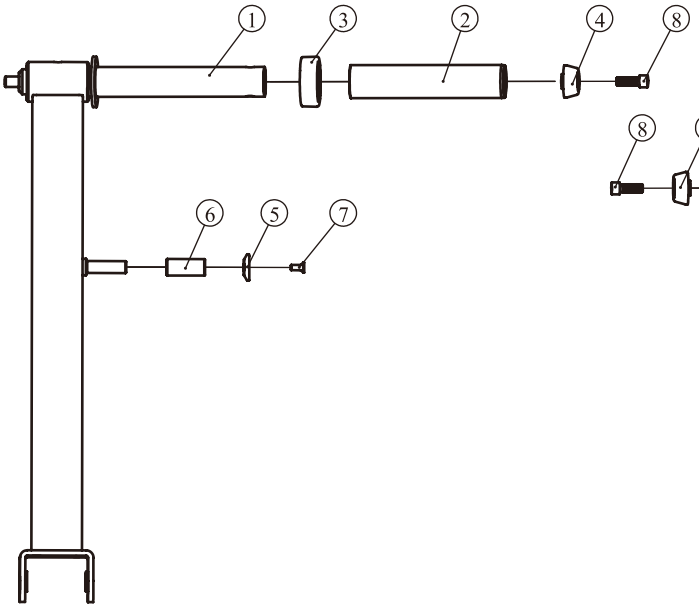

Swing Frame ASSY II

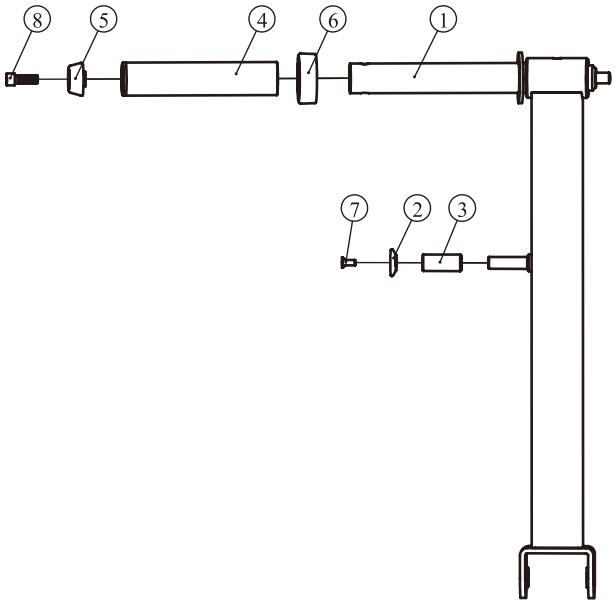

Grade No.	Part No.	Description	QTY
15.1	ECP7131300	Swing Frame I	1
15.2	HZ70022000V1	Short Barbell Casing	1
15.3	PL1301600	Rubber Bumper	1
15.4	SL70012000	Plastic Cap	1
15.5	ECP1012400	Aluminum CapΦ40	1
15.6	ECP1013000	Rotating Sleeve	1
15.7	CNLM8*20DS20NL	Flat Head Cap Screw M8*20	1
15.8	GB70M12*35*35DHS20NL	Socket Head Cap Screw M12*35	1

Grade No.	Part No.	Description	QTY
16.1	ECP7131400	Swing Frame II	1
16.2	ECP1012400	Aluminum CapΦ40	1
16.3	ECP1013000	Rotating Sleeve	1
16.4	HZ70022000V1	Short Barbell Casing	1
16.5	SL70012000	Plastic Cap	1
16.6	PL1301600	Rubber Bumper	1
16.7	CNLM8*20DS20NL	Flat Head Cap Screw M8*20	1
16.8	GB70M12*35*35DHS20NL	Socket Head Cap Screw M12*35	1

Measurement Guide

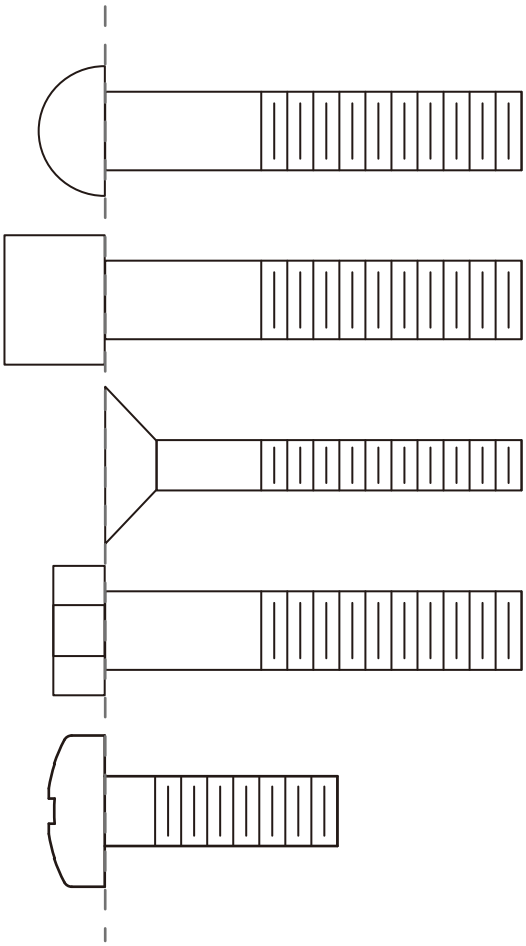

BHCS = Button Head Cap Screw

SHCS = Socket Head Cap Screw

FHCS = Flat Head Cap Screw

HHB = Hex Head Bolt

CRPHS = Cross Recessed Pan Head Screw

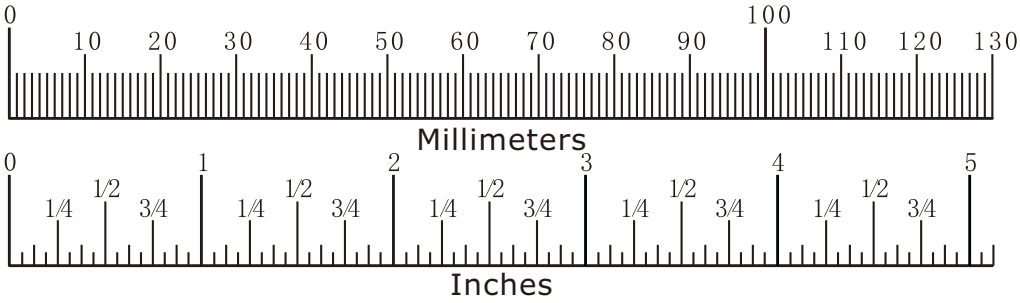

Diameter of bolt (mm/inch)	M6(1/4")	M8(5/16")	M10(3/8")	M12(1/2")	M16(5/8")
Tightening torque (N.m)	9~12	22~30	45~59	78~104	193~257
Operational methods for adult men	The strength of the wrist	The strength of the wrist and forearm	The strength of the entire arm	The strength of the arm and upper body	with all strength

Assembly Instructions

Assembly of the equipment takes professional installers about 2 hours. If this is the first time you have assembled this type of equipment, plan to spend more time. It is strongly recommended to assemble the equipment by professional installers. You may find it quicker, safer, easier to assemble this equipment with the help of a friend, as some of components may be large, heavy or awkward to handle alone. It is important that you assemble your product in a clean, clear, uncluttered area. This will enable you to move around the product while you are fitting components and reduce the possibility of injury during assembly.

⚠ NOTE

As with any assembled part, proper alignment and adjustment is critical. While tightening the fasteners, be sure to leave room for adjustments. Do not fully tighten the fasteners until instructed to do so. Be careful to assemble the components in the sequence presented in this guide.

Assembly

STEP 1

1. Attach the two Elastic Band Hanging Pillar (#27) to the Rear Connecting Frame (#3) using:
   two M8*65 SHCS (#48) two Φ9*Φ16*1.6 Flat Washer (#42)
   two Spring Washer Φ8 (#40)
2. Attach the Rear Connecting Frame (#3) and the Limit Frame (#13) to the Side Frame ASSY I (#1) and the Side Frame ASSY II (#2) using:
   eight M12*30 SHCS (#34) eight Φ13*Φ24*2.5 Flat Washer (#45)
   eight Spring Washer Φ12 (#41)
3. Attach the Front Floor Frame ASSY (#9) to the Limit Frame (#13) and the Side Frame ASSY I (#1) and the Side Frame ASSY II (#2) using:
   six M12*30 SHCS (#34) six Φ13*Φ24*2.5 Flat Washer (#45)
   six Spring Washer Φ12 (#41)

Note: Wrench Tighten Bolts and Nylon Lock Nuts.

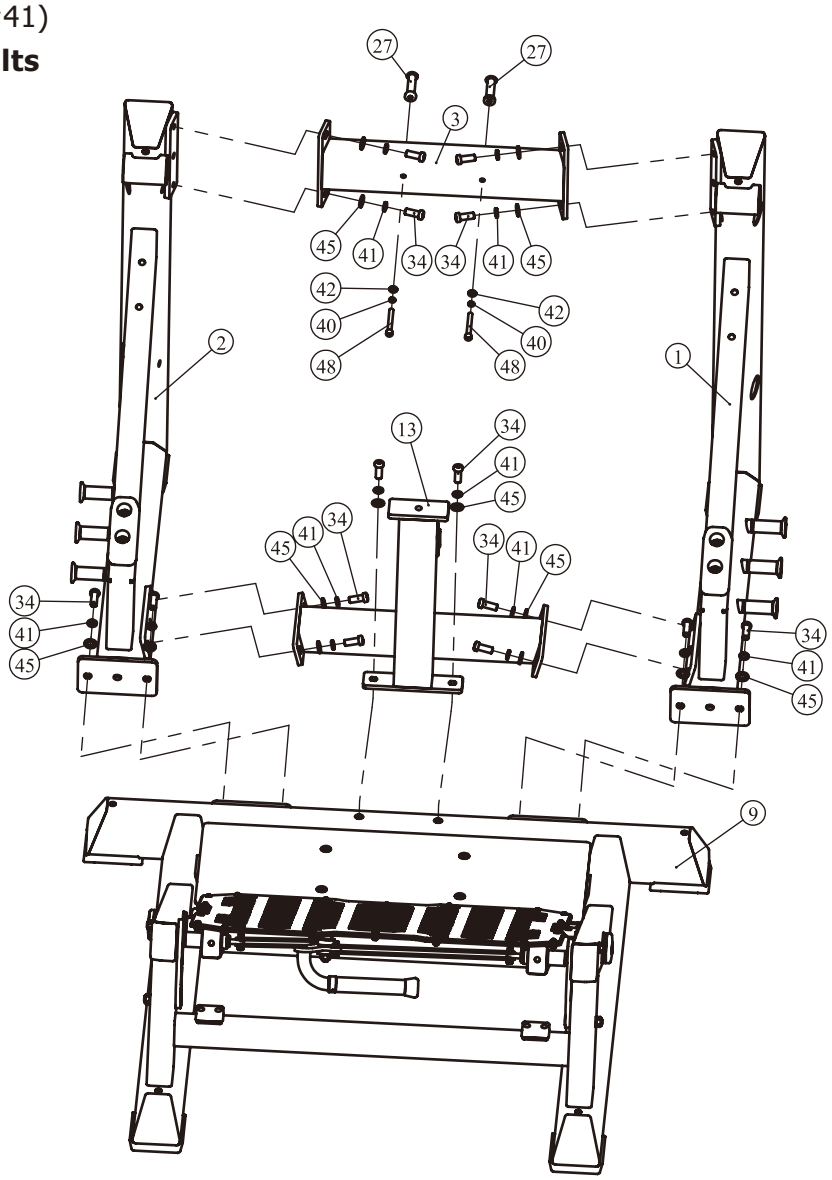

Assembly

STEP 2

1. Attach two LOGO Plate (#19) and two LOGO Inner Plate (#20) to the Back Pad Frame ASSY (#11) using:
   eight M5*10 BHCS (#28)
2. Attach the Limit Adjusting Frame ASSY (#12) to the Back Pad Frame ASSY (#11) using:
   one Fixing Shaft II Φ25*134 (#18)
   two M10*30 FHCS (#38)
   two Aluminum Cap Φ60 (#29)
3. Attach the Gas Spring (#22) to the Limit Adjusting Frame ASSY (#12) and the Back Pad Frame ASSY (#11) using:
   two M8 Nylon Lock Nut (#46)
4. Attach the Adjusting Handle Frame ASSY (#10) to the Back Pad Frame ASSY (#11) using:
   one Fixing Shaft I Φ25*79 (#17)
   two M10*30 FHCS (#38)
   two Aluminum Cap Φ60 (#29)
   one M10*100 SHCS (#37)
   two Φ11*Φ20*2 Flat Washer (#43)
   one M10 Nylon Lock Nut (#47)
5. Attach the Pulling Rod Frame ASSY (#5) to the Adjusting Handle Frame ASSY (#10) and the Limit Adjusting Frame ASSY (#12) using:
   two M12*70 SHCS (#35)
   four Φ13*Φ24*2.5 Flat Washer (#45)
   two M12 Nylon Lock Nut (#49)
6. Firstly attach two Set-Contained Bearing (#7) to the Back Pad Frame ASSY (#11) and then attach the whole Back Pad Frame ASSY (#11) to the Side Frame ASSY I (#1) and the Side Frame ASSY II (#2) using:
   four M10*100 SHCS (#37)
   four Φ11*Φ20*2 Flat Washer (#43)
   four M10 Nylon Lock Nut (#47)
7. Attach the two Balance Iron (#8) to the Back Pad Frame ASSY (#11) using:
   four M8*20 SHCS (#31)
   four Φ9*Φ16*1.6 Flat Washer (#42)
   four Spring Washer Φ8 (#40)

Note: Wrench Tighten Bolts and Nylon Lock Nuts.

Assembly

STEP 2-1

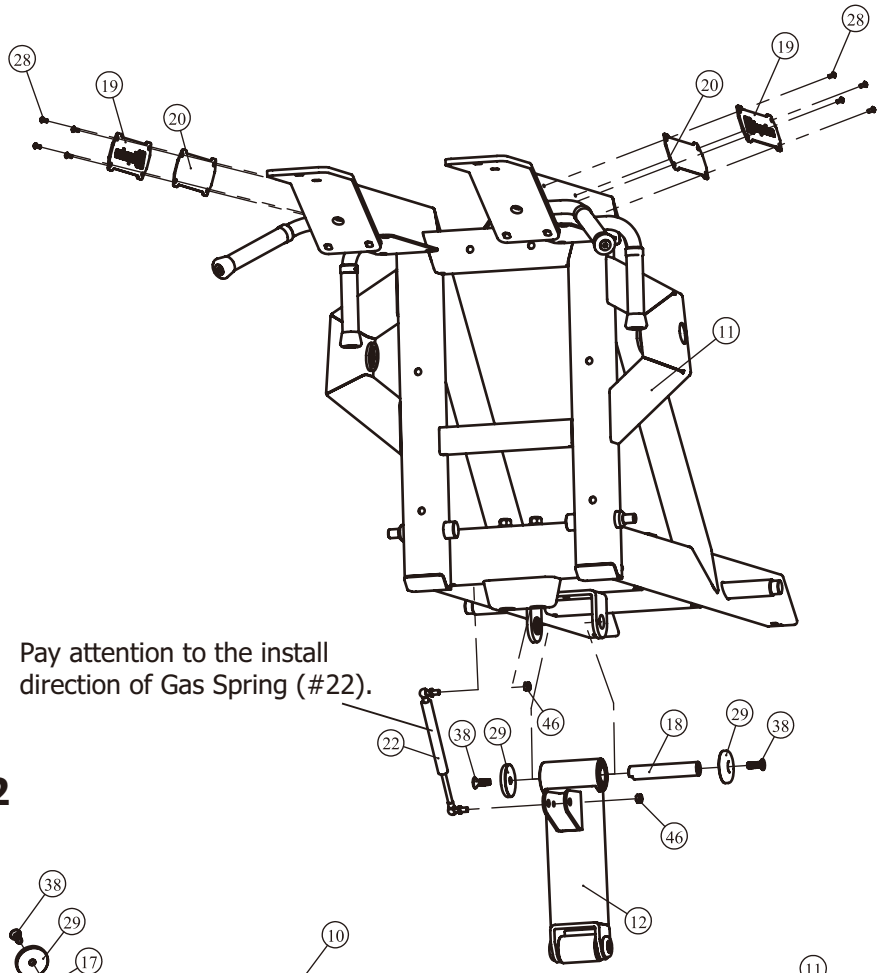

STEP 2-2

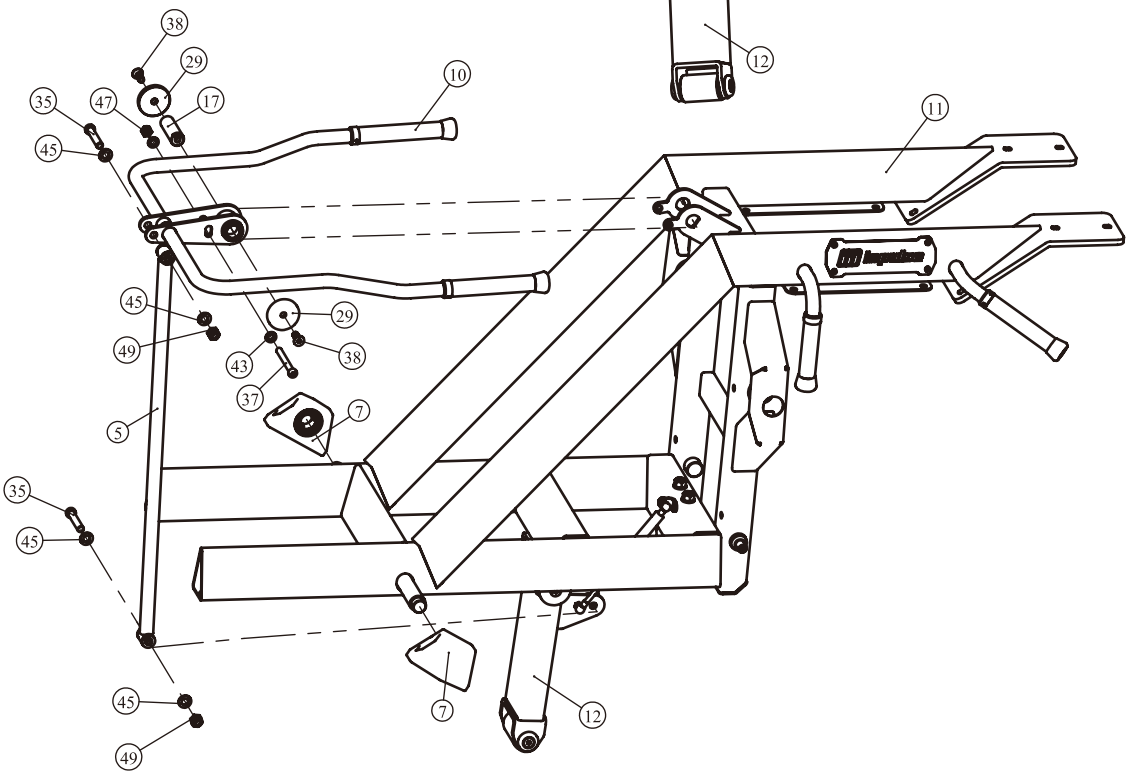

STEP 2-3

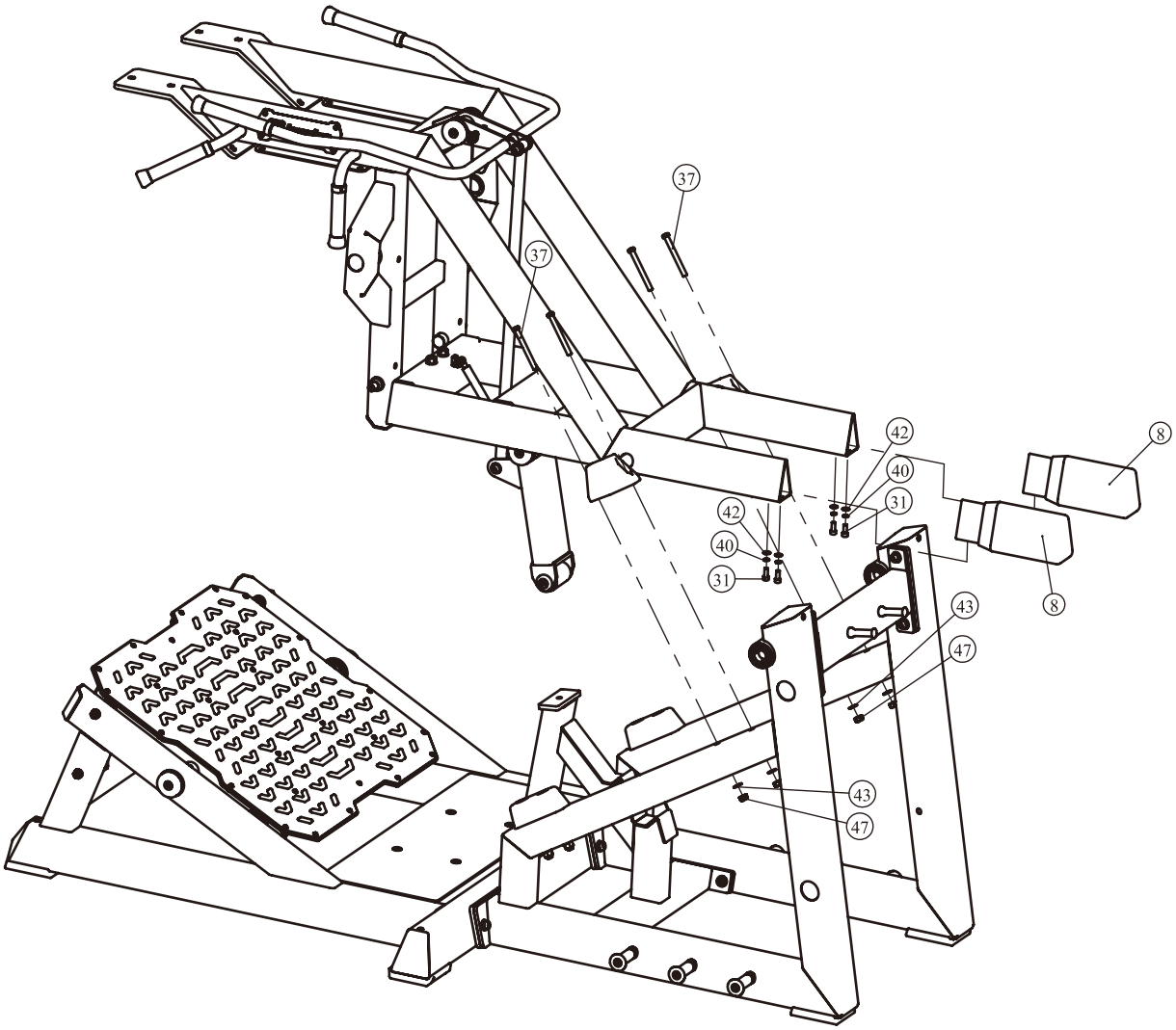

Assembly

STEP 3

1. Attach the Short Connecting Rod ASSY (#14) to the Swing Frame ASSY I (#15) and the Back Pad Frame ASSY (#11) using:
   two M8*25 BHCS (#33) two Φ9*Φ22*1.6 Flat Washer (#44)
   two Spring Washer Φ8 (#40)
2. Attach the Swing Frame ASSY I (#15) to the Side Frame ASSY II (#2) using:
   one Shaft Φ25*109 (#21) two Aluminum Cap Φ60 (#29)
   two M10*30 FHCS (#38)
3. Attach the Short Connecting Rod ASSY (#14) to the Swing Frame ASSY II (#16) and the Back Pad Frame ASSY (#11) using:
   two M8*25 BHCS (#33) two Φ9*Φ22*1.6 Flat Washer (#44)
   two Spring Washer Φ8 (#40)
4. Attach the Swing Frame ASSY II (#16) to the Side Frame ASSY I (#1) using:
   one Shaft Φ25*109 (#21) two Aluminum Cap Φ60 (#29)
   two M10*30 FHCS (#38)

Note: Wrench Tighten Bolts and Nylon Lock Nuts.

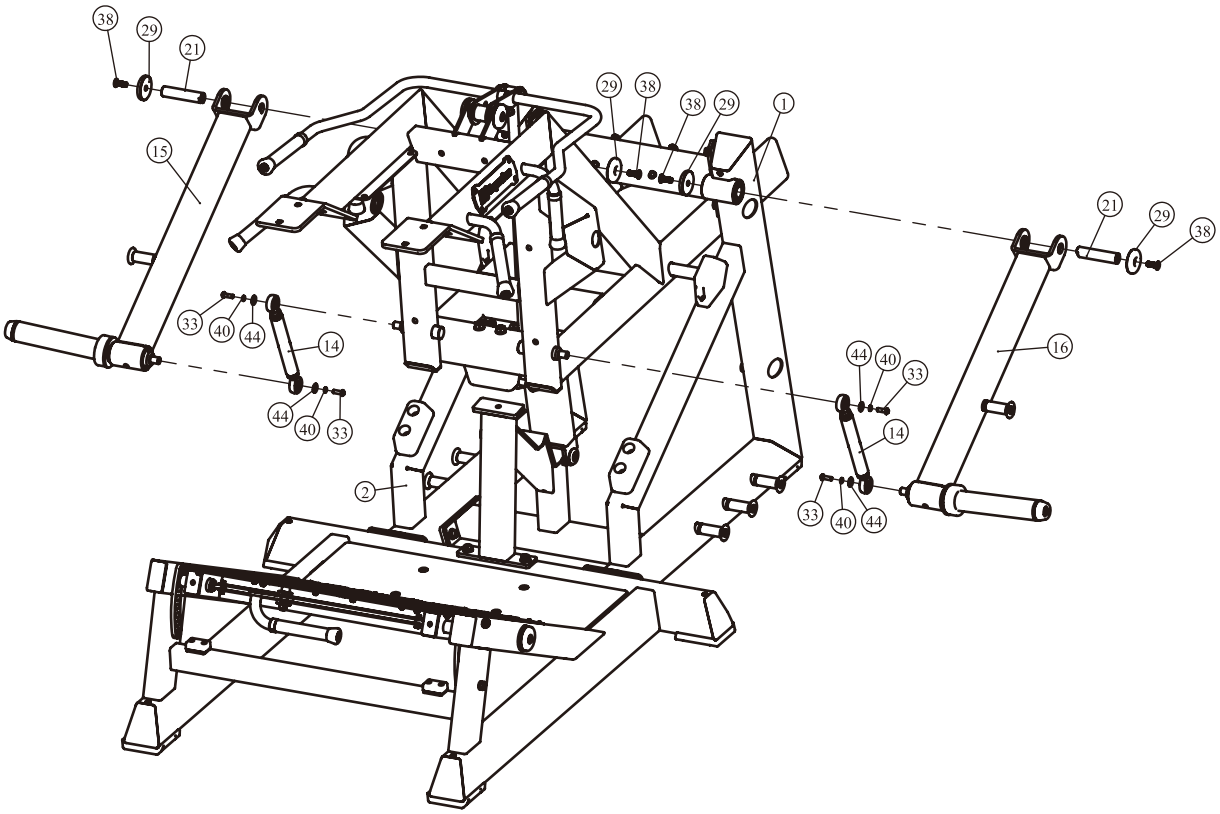

Assembly

STEP 4

1. Attach two Barbell Storage Frame ASSY (#6) to the Side Frame ASSY I (#1) using:
   two M12*30 SHCS (#34) two Φ13*Φ24*2.5 Flat Washer (#45)
   two Spring Washer Φ12 (#41)
2. Attach two Barbell Storage Frame ASSY (#6) to the Side Frame ASSY II (#2) using:
   two M12*30 SHCS (#34) two Φ13*Φ24*2.5 Flat Washer (#45)
   two Spring Washer Φ12 (#41)
3. Attach two Barbell Frame ASSY (#4) to the Back Pad Frame ASSY (#11) using:
   two M12*30 FHCS (#39) two Aluminum Cap Φ54 (#30)

Note: Wrench Tighten Bolts and Nylon Lock Nuts.

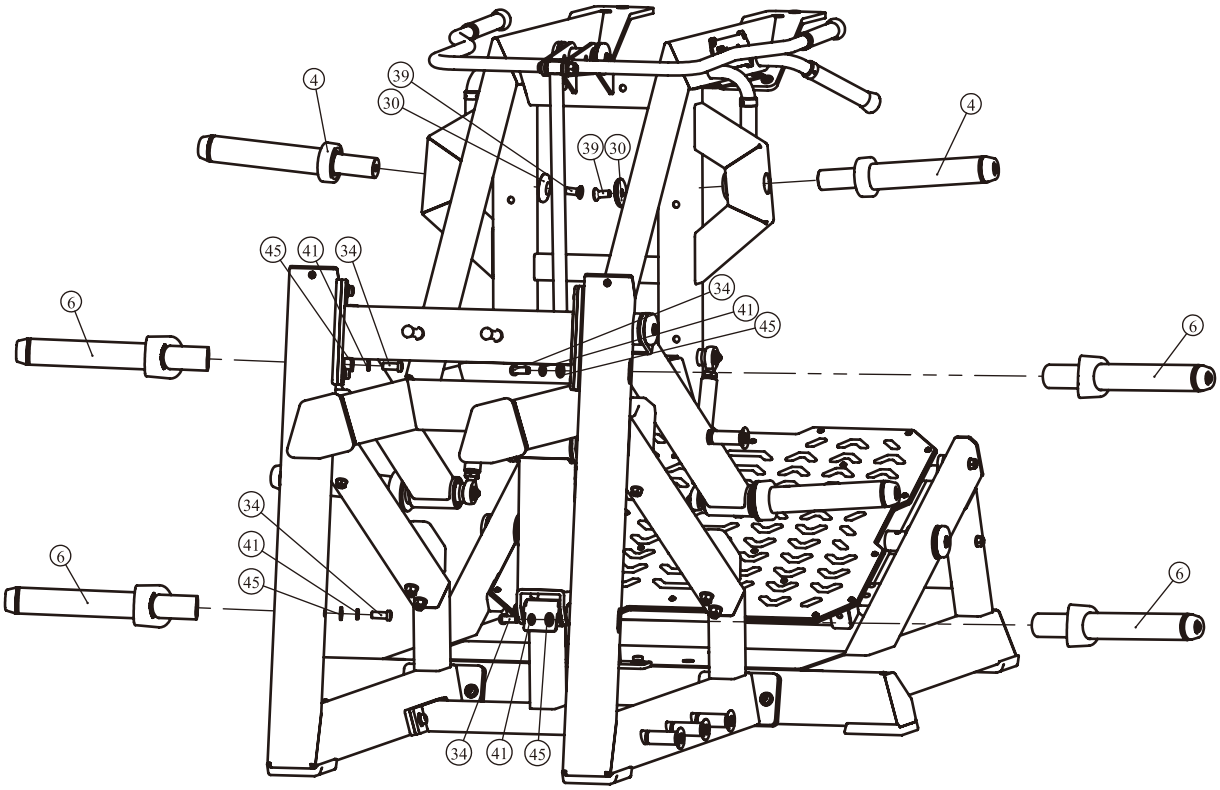

Assembly

STEP 5

1. Attach the Back Pad (#23) to the Back Pad Frame ASSY (#11) using:
   four M10*75 SHCS (#36) four Φ11*Φ20*2 Flat Washer (#43)
2. Attach the Head Pad (#24) to the Back Pad Frame ASSY (#11) using:
   two M10*75 SHCS (#36) two Φ11*Φ20*2 Flat Washer (#43)
3. Attach two Shoulder Pad I (#25) to the Back Pad Frame ASSY (#11) using:
   eight M10*25 SHCS (#32) eight Φ11*Φ20*2 Flat Washer (#43)
4. Attach two Shoulder Pad II (#26) to the Back Pad Frame ASSY (#11) using:
   eight M10*25 SHCS (#32) eight Φ11*Φ20*2 Flat Washer (#43)

Note: Wrench Tighten Bolts and Nylon Lock Nuts.

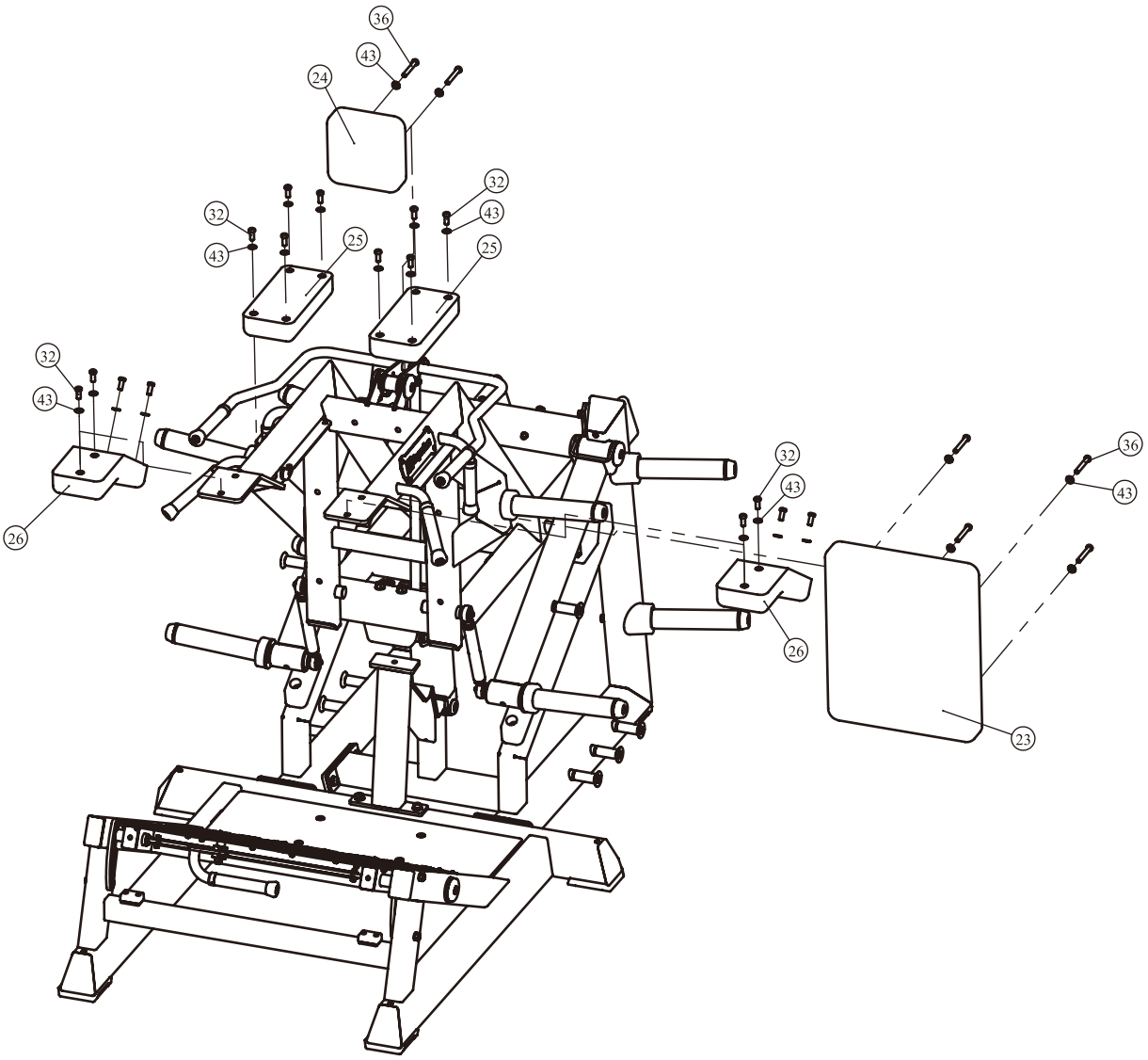

Adjust Instructions and Exercise Instructions

Weight Plate Installation Requirements

1. Please use Olympic Weight Plate which hole is greater than Φ50mm and external diameter is less than Φ450mm.
2. The total weight on each side can not be greater than 100kg.
3. This equipment does not contains Weight Plate.

Adjust & Exercise Instruction

1. Select an appropriate weight or hang a pair of resistance bands on both weight horns.
2. Hold the pedal adjust handle and move the Foot Pedal to desired position, the release the handle and make sure the pedal firmly stucked.
3. Grasp the handle with both hands, put your feet on the Foot Pedal, Spread your legs and move the back frame.
4. Slowly return to starting position.
5. Hold the adjust handle and move the back frame on limit frame during temporary rest.

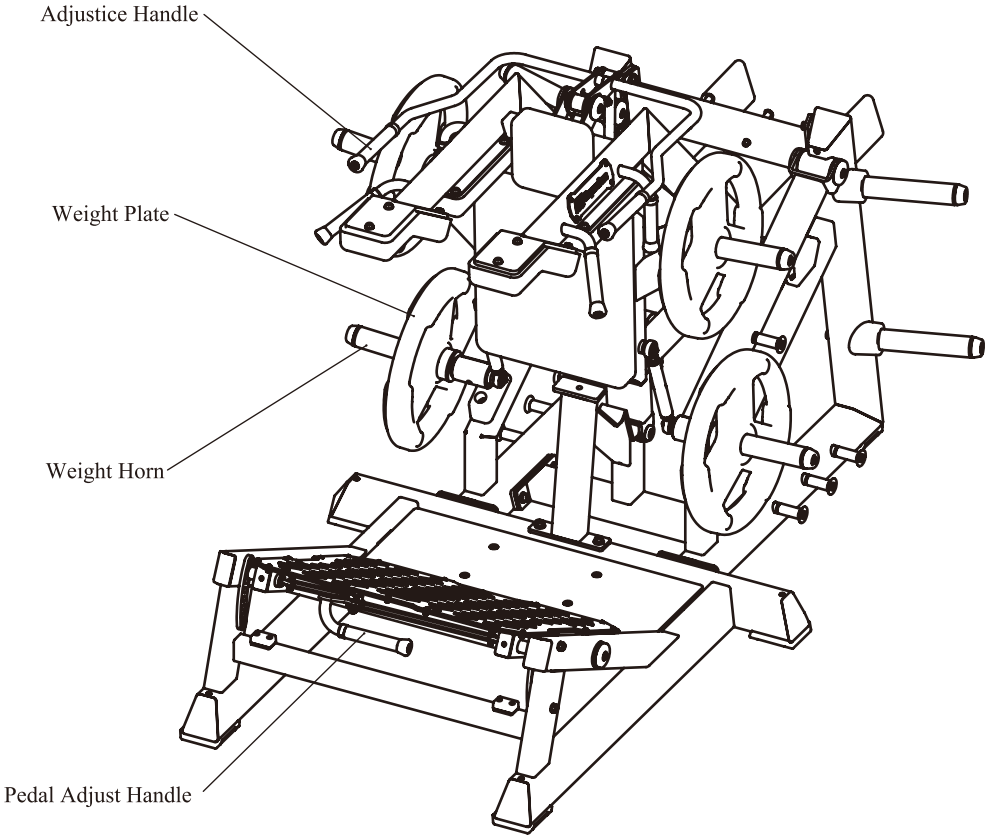

Maintenance Schedule

ROUTINE	COMMERCIAL MAINTENANCE	HOME MAINTENANCE	LATEST DATE ENTRY						
Inspect; Links, Pull Pins, Snap Locks, Swivels, Weight Stack Pins	DAILY	WEEKLY							
Clean; Upholstery	DAILY	WEEKLY							
Inspect; Cables or Belts and their tension	DAILY	WEEKLY							
Inspect; Accessory Bars, and Handles	WEEKLY	3 MONTHS							
Inspect; All Decals	WEEKLY	3 MONTHS							
Inspect; All Nuts and Bolts, Tighten if needed	WEEKLY	3 MONTHS							
Inspect; Anti-Skid Surface	WEEKLY	3 MONTHS							
Clean & Lubricate; Guide Rods with a Teflon (PTFE) based lubricant (Superlube)	MONTHLY	3 MONTHS							
Lubricate; Seat Sleeves, Turcite Bushings, Linear Bearing	MONTHLY	3 MONTHS							
Clean and Wax; All Glossy Finishes	6 MONTHS	YEARLY							
Repack with Grease; Linear Bearings	6 MONTHS	YEARLY							
Replace; Cables, Belts and Connecting Parts	YEARLY	3 YEARS							

Your equipment comes with a commercial maintenance decal. For personal, in home use, please follow the home maintenance schedule listed above.

General Maintenance Information

Links, Pull-Pins, Snap Hooks, Swivels, Weight Stack Pins:
* Check all pieces for signs of visible wear or damage.
* Check springs in snap hooks and pull-pins for proper tension and alignment.
* If the spring sticks or has lost its rigidity, replace it immediately.

Upholstery:
* To ensure prolonged upholstery life and proper hygiene, all upholstered pads should be wiped down with a damp cloth after every workout.
* Periodically take the time to use a mild soap or an approved vinyl upholstery cleaner to deter the onset of cracking or drying. Avoid using any abrasive cleaners or cleaners not intended for use on vinyl.
* Replace ripped or warn upholstery immediately.
* Keep sharp or pointed objects clear of all upholstery.

Decals:
* Inspect and familiarize yourself with any safety warnings or other user information posted on each decal.

Nuts and Bolts:
* Inspect all nuts and bolts for any loosening and tighten if needed.
* Go through a re-tightening sequence periodically to ensure that all hardware is tensioned proper.

Anti-Skid Surfaces:
* These surfaces are designed to supply secure footing and need to be replaced if they appear worn or become slippery.

Belts and Cables:
* We uses only high quality belt, and mil-spec cables.
* Visually inspect the belts and cables for fraying, cracking, peeling or discoloration.
* While the machine is not in use, carefully run your fingers along the belt or cable to feel for thinning or bulging areas.
* Replace belts and cables immediately at the first signs of damage or wear. Do not use equipment until belts or cables have been replaced.

Belt and Cable Tension:
* Referring to the Owners Manual, when belts or cables are used check all bolts attachments to be sure they are properly attached.
* Check slack in cables and re-adjust cable tension if needed.

Seat Sleeves, Guide Rods:
* Wipe down adjusting tubes with a dust free rag before applying lubricant.
* Lubricate seat sleeves and Guide Rods with a Silicon or Teflon based lubricant spray.

Linear Bearings:
* Referring to the Owners Manual carefully disassemble the bearing from its housing and place a finger full of light grease (lithium, super lube, etc.) into the inside of the bearing. Using your finger, press the grease into the ball-bearings and their tracks. repeat until the ball-bearing tracks are full of grease. Insert the shaft back into the bearing and wipe off excess grease.

PLEASE KEEP THIS FOR YOUR RECORDS

Weight Training Tips

Use this manual to guide you through the basic exercises you can perform on your equipment. To gain maximum results and avoid possible injury, consult a fitness professional to develop your complete exercise program.

Always consult your physician before starting any exercise program.

To be successful in your exercise program, it is important to develop an understanding of the basic principles of strength training. Now that you have your equipment, it is only natural that you want to get started immediately. First, determine a set of realistic goals and objectives for yourself. By deciding on an exercise plan that is right for you prior to starting, you will contribute significantly to your success.

Warm up properly before engaging in weight resistance training. Stretching, yoga, jogging, calisthenics or other cardiovascular exercise can help prepare your body for the heavier workload of lifting weights.

Learn how to perform the exercise correctly before using heavy weight. Correct form is important to avoid injury and to ensure that you work the proper muscle groups.

Know your limitations. If you are new to weight training or are embarking on an exercise regimen after a long layoff, start slowly and build foundational strength over a longer period of time.

Pay attention to your breathing. Exhale when you exert is a general rule of thumb. Never hold your breath.

SYSTEM CERTIFICATION ISO 9001 SGS
SYSTEM CERTIFICATION ISO 14001 SGS
SYSTEM CERTIFICATION OHSAS 18001 SGS
SYSTEM CERTIFICATION ISO 10015 SGS